16-568-101
March 1989

EARTHSHAKER!™

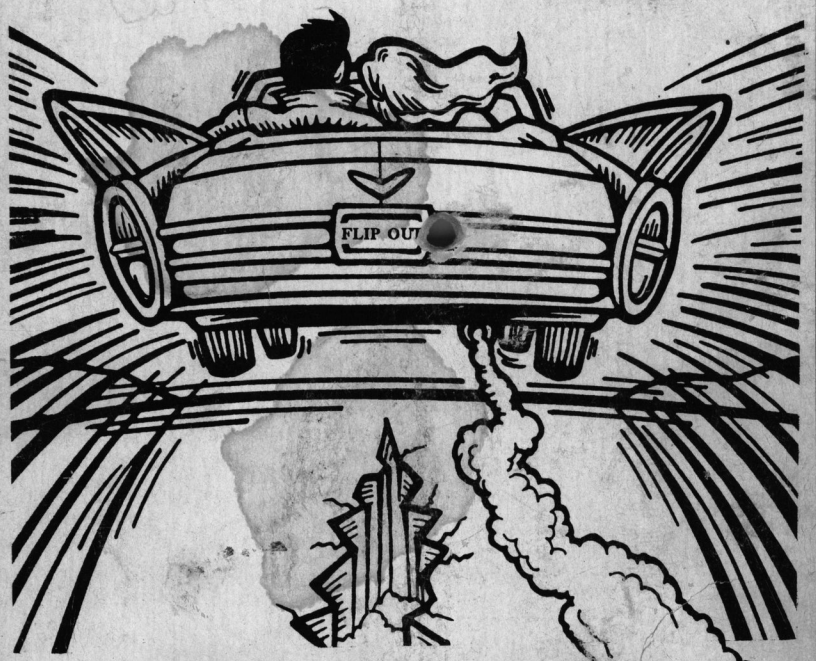

OPERATIONS MANUAL

including:

- Game Operation
- Test/Diagnostic Procedures
- Parts Information
- Reference Diagrams & Schematics

Williams®
ELECTRONICS GAMES, INC.

EARTHSHAKER ROM and Jumper Table

Game	System 11B CPU Rev.	P/N - U15 Game µP	P/N - U27 G. ROM 1	P/N - U26 G. ROM 2	P/N - U21 S. ROM 1	P/N - U22 S. ROM 2	P/N - U24 Sound µP	Jumpers
BIG GUNS	-	5400-09150-00	A-5343-557-2	A-5343-557-1	A-5343-557-4	A-5343-557-3	5400-09150-00	W1, 2, 4, 5, 7, 8, 11, 14, 16, 17, and 19
SPACE STATION	-	↓	A-5343-552-2	A-5343-552-1	A-5343-552-4	A-5343-552-3	↓	W1, 2, 4, 5, 7, 8, 11, 14, 16, 17, and 19
CYCLONE	-	↓	A-5343-564-2	A-5343-564-1	A-5343-564-4	A-5343-564-3	↓	W1, 2, 4, 5, 7, 8, 11, 14, 16, 17, and 19
BANZAI RUN	-	↓	A-5343-566-2	A-5343-566-1	A-5343-566-4	A-5343-566-3	↓	W1, 2, 4, 5, 7, 8, 11, 14, 16, 17, and 19
SWORDS OF FURY	-	↓	A-5343-559-2	A-5343-559-1	A-5343-559-4	A-5343-559-3	↓	W1, 2, 4, 5, 7, 8, 11, 14, 16, 17, and 19
TAXI	-	↓	A-5343-553-2	A-5343-553-1	A-5343-553-4	A-5343-553-3	↓	W1, 2, 4, 5, 7, 8, 11, 14, 16, 17, and 19
JOKERZ	-	↓	A-5343-567-2	A-5343-567-1	A-5343-567-4	A-5343-567-3	↓	W1, 2, 4, 5, 7, 8, 11, 14, 16, 17, and 19
EARTH-SHAKER	-	↓	A-5343-568-2	A-5343-568-1	A-5343-568-4	A-5343-568-3	↓	W1, 2, 4, 5, 7, 8, 11, 14, 16, 17, and 19

EARTHSHAKER Solenoid Table

Sol. No.	Function	Solenoid Type	Wire Color [1]	Connections: CPU Bd	Connections: Playfield/ Cabinet	Driver Trnstr	Solenoid Part Number / Flashlamp Type (d= Display Bd; p=Playfield)
01A [3]	Outhole Kicker	Switched	{Vio-Brn	1P11-1	5J1-9: 5J4-9 (A)	Q33	AE-23-800
01C [3]	Captive BallFlashers	Switched	Blk-Brn}	(Gry-Brn)	5J5-9 (C)	Q33	#89 flashlamp 1p
02A [3]	Ball Release (Shtr Lane Feeder)	Switched	{Vio-Red	1P11-3	5J1-7: 5J4-8 (A)	Q25	AE-23-800
02C [3]	Cntr Ramp 1 & Bldg Flashers	Switched	Blk-Red}	(Gry-Red)	5J5-8 (C)	Q25	#906/#89 flashlamps 2p
03A [3]	3-Bank Dr Tgt Reset	Switched	{Vio-Orn	1P11-4	5J1-6: 5J4-7 (A)	Q32	AE-26-1200
03C [3]	Cntr Ramp 2 & Spinner Flashers	Switched	Blk-Orn}	(Gry-Orn)	5J5-7(C)	Q32	#906/#89 flashlamps 2p
04A [3]	California Fault	Switched	{Vio- Yel	1P11-5	5J1-5: 5J4-6 (A)	Q24	AE-23-800
04C [3]	Cntr Ramp 3 Flasher	Switched	Blk-Yel}	(Gry-Yel)	5J5-5 (C)	Q24	#906 flashlamp 1p
05A [3]	Eject Hole	Switched	{Vio-Gm	1P11-6	5J1-4: 5J4-5 (A)	Q31	AE-26-1500
05C [3]	Cntr Ramp 4 Flasher	Switched	Blk-Gm}	(Gry-Grn)	5J5-4 (C)	Q31	#906 flashlamp 1p
06A [3]	Bottom Ball Popper	Switched	{Vio-Blu	1P11-7	5J1-3: 5J4-4 (A)	Q23	AE-23-800
06C [3]	Right Ramp 1 Flasher	Switched	Blk-Blu}	(Gry-Blu)	5J5-3 (C)	Q23	#906 flashlamp 1p
07A [3]	Knocker	Switched	{Vio-Blk	1P11-8	5J1-2: 5J4-2 (A)	Q30	AE-23-800
07C [3]	Right Ramp 2 Flasher	Switched	Blk-Vio}	(Gry-Vio)	5J5-2 (C)	Q30	#906 flashlamp 1p
08A [3]	Not Used	Switched	{Vio-Gry	1P11-9	5J1-1: 5J4-1 (A)	Q22	
08C [3]	Right Ramp 3 Flashers	Switched	Blk-Gry}	(Gry-Blk)	5J5-1 (C)	Q22	#906/#89 flashlamps 2p
09	Not Used	Controlled	Brn-Blk	1P12-1	5J2-9: 5J6-9: 2J4-3	Q17	
10	Upper Playfield Gnl Illum Relay	Controlled	Brn-Red	1P12-2	5J2-8: 5J6-8: 2J4-5	Q9	5580-12145-01 [4a] [4b]
11	Insert Board Gnl Illum Relay	Controlled	Brn-Orn	1P12-4	5J2-6: 5J6-7: 2J4-6	Q16	5580-09555-01
12	A/C Select Relay	Controlled	Brn-Yel	1P12-5	5J2-5	Q8	5580-09555-01 [5]
13	Top Ball Popper	Controlled	Brn-Grn	1P12-6	5J2-4: 5J6-5	Q15	AE-23-800
14	Jackpot Flasher	Controlled	Brn-Blu	1P12-7	5J2-4: 5J6-3	Q7	#906 flashlamps [4a] 2p
15	Low Playfield Gnl Illum Relay	Controlled	Brn-Vio	1P12-8	5J2-2: 5J6-2	Q14	5580-12145-01 [4a]
16	On Ramp & J Bumper Flashers	Controlled	Brn-Gry	1P12-9	5J2-1: 5J6-1	Q6	#906/#89 flashlamps 2p
17	Left Jet Bumper	Special #1	Blu-Brn	1P19-7	5J3-7: 5J7-7	Q75	AE-23-800
18	Left Kicker ("sling")	Special #2	Blu-Red	1P19-4	5J3-6: 5J7-6	Q71	AE-26-1500
19	Right Jet Bumper	Special #3	Blu-Orn	1P19-3	5J3-3: 5J7-3	Q73	AE-23-800
20	Right Kicker ("sling")	Special #4	Blu-Yel	1P19-6	5J3-4: 5J7-5	Q69	AE-26-1500
21	Top Jet Bumper	Special #5	Blu-Grn	1P19-8	5J3-2:5J7-2	Q77	AE-23-800
22	Quake Motor	Special #6	Blu-Blk	1P19-9	5J3-1: 5J7-1	Q79	14-7951
-	Right Flipper	-	Orn-Vio	1P19-1	2J5-5: 2J10-7	-	
	Lower Right Flipper		[Blu-Vio] [2]		[2J10-1: 2J8-15]		FL11630/50VDC
-	Left Flipper	-	Orn-Gry	1P19-2	2J5-4: 2J10-8	-	
	Lower Left Flipper		[Blu-Gry] [2]		[2J10-2:2J8-4]		FL11630/50VDC
	Upper Left Flipper		[Blk-Blu]		[2J10-4:2J8-12]		FL11722/50VDC

Notes: 1. Wire colors, except flipper Orn-Vio and Orn-Gry, are ground connections (to coil terminal with unbanded end of diode). Flipper Orn-Vio and Orn-Gry wires connect from CPU Board to flipper switch. 2. Flipper connections shown in braces are from flipper switch to flipper coil. 3. "A" circuits are pulsed, when Sol. 12 is de-energized; "C" circuits are pulsed, with Sol. 12 energized. Wire colors in brackets are those from respective A and C terminals corresponding to the J1-terminal connection listed for the Aux Power Driver Bd, which controls the device pulsing by Sol. 12.
4. Relay is mounted on Relay Bd, (4a) p/n C-11998-1; (4b) C-11902-1. 5. Relay is mounted on Aux Power Driver Bd, D-12247 in the backbox.

Contents

Section 1 - Game Operation & Test Information

EARTHSHAKER (System 11B) ROM Summary 1
Connector & Component Identification 2
EARTHSHAKER Circuit Boards. 2
Figure 1. Locations Diagram - Game Circuit Boards and Major Mechanisms 3
EARTHSHAKER Game Control Locations. 4
Figure 2. Pinball Game Controls Locations 4
Pinball Game Assembly Instructions. 5
Figure 3. Pinball Assembly, Playfield Pitch Angle, and Leg Leveller Details 5
Game Operation 6
EARTHSHAKER Game Play 8
EARTHSHAKER Game Status Displays 9
EARTHSHAKER Audit Table 10
EARTHSHAKER Game Adjustment Table. 11
EARTHSHAKER Game Adjustment Setting Comparison Table 12
Game Adjustment Procedure. 13
Items 01 - 05 14
06 - 11 15
12 - 20 16
21 - 28 17
29 - 30 18
31 - 40 19
41 - 48 20
49 - 57 21
EARTHSHAKER Game Adjustments Table for German Games. 22
53 - 63 23
64 - 70 24
Resetting the High Scores 25
Game Pricing 26
EARTHSHAKER Pricing Table 27
Test/Diagnostic Procedures. 28
Music Test 28
Display Test 28
Sound Test 28
Lamp Tests 29
EARTHSHAKER Lamp-Matrix Table 29
Solenoid Test 30
EARTHSHAKER Solenoid Table 30
Special and Controlled Solenoids - Diagrams and Details. 31
Figure 4. Typical Solenoid A/C Select Relay Circuit 31
Switch Tests 32
EARTHSHAKER Switch-Matrix Table 32
C-Side Test 33
Ending the Diagnostic Tests 33
Auto Burn-in Mode. 34
System-11B Memory Chip Test. 34
CPU LED Indicator Codes Table 34
System-11B Sound Circuitry Tests 35
Fuse Locations Diagram & Listing 36
Maintenance Information 37
Figure 5. Adjustments and Lubrication Points, Shooter Lane Feeder 37

©Copyright 1989 Williams Electronics Games, Inc.

Contents

Section 2 - Game Parts Information

Locations Diagram - Game Circuit Boards and Major Mechanisms (with Parts Listed) 40
Power Supply Board (D-12246) Parts Layout and Parts Listing 41
Aux Power Driver Board (D-12247-568) Parts Layout and Parts Listing 42
Backbox Interconnect Board (D-12313-568) Parts Layout and Parts Listing 42
Audio Board Assembly (D-11581-568). 43
System 11B CPU Board Parts Layout and Parts Listing . . . . . 44 - 45
Master Display Board (D-12232-1) Layout and Parts List 46
16-Character Display Glass (used on Master Display Board) 46
Building Lamp Board Assembly (C-12427) Parts List 47
Lamp Board ("6-C") Assembly (C-12490) Parts List 47
Lamp Board ("8-L") Assembly (C-12491) Parts List 47
Lamp Board ("5-R") Assembly (C-12492) Parts List 47
Lamp Board ("6-R") Assembly (C-12496) Parts List 47
Lamp Board ("7-D") Assembly (D-12501) Parts List 47
Relay Board (Sol. 10, 15 Gen. Illum) (C-11902-1). 47
Relay Board (Sol. 11 Gen. Illum) (C-11998-1) 47
Flipper Assemblies (C-11626-R-3, C-11626-L-3 and C-11626-L-8) Parts List & Notes. 48
Flipper Link Assembly, Knocker Assembly, & Ball Trough Switch Assembly Parts 49
Kicker Arm ("Slingshot") Assembly (B-9463) and Associated Parts. 50
Ball Shooter Lane Feeder (C-9638) and Associated Parts & Outhole Kicker (B-8039-2). 51
3-Bank Drop Target (C-11223-1) & Standup Target Assemblies 52
3-Bank Opto Board (C-12559) & Schematic 53
Coin Door Assembly (2-chute: 09-17002-x; 3-chute: 09-17003-x) Layout & Parts List. . . . . 54 - 55
Jet Bumper Assemblies & Eject Hole Arm Assembly (B-9361-R) and Associated Parts 56
Eject Hole Arm Assembly (B-9361-R) and Associated Parts 56
Top Ball Popper Assembly (D-11335-2) & Bottom Ball Popper Assembly (D-12642). 57
Zone Opener Assembly (C-12429) Layout & Parts List 58
Building Assembly (B-12728) Layout & Parts List 59
Shaker Assembly (B-12388) & State Assembly (C-12433) Layouts & Parts Lists 60
High Current Driver Assembly (C-12493) & Schematic 61
Bridge Assembly (C-12584), Mini-Post, and Microswitch Mounting Bracket Layouts & Lists . . 62
Center Ramp (R-12487), Right Ramp (D-12489), & Spiral Ramp (D-12364) Layouts & Lists . . 63
Backbox Parts Listing & Miscellaneous **EARTHSHAKER** Parts 64
Solenoids/Flashers and Rubber Parts. 65
Switches: Listing, Matrix Diagram, and Typical Switch Circuit. . . . . 66 - 67
Lamps: Listing, Matrix Diagram, and Typical Lamp Circuit. . . . . 68 - 69
Playfield Parts. 70

Section 3 - Reference Diagrams & Schematics

Cabinet Wiring Diagram 72
3-Bank Opto Board (C-12559)Schematic 73
Power Supply Board (D-12246) Layout and Schematic. . . . . 74 - 75
System 11B CPU Board (D-11883-568) Layout 76
Schematic, System 11B CPU (16-9019, Sheet 1, 2, 3, 4 of 4) 77, 78, 79, 80
Master Display Board and Audio Board Layouts 81
Master Display Board (D-12232-1) Schematic. 82
Audio Board (D-11581-568) Schematic 83
Aux Power Driver Board (D-12247-568) Schematic 84
Aux Power Driver Board and Backbox Interconnect Board Layouts 85
Backbox Interconnect Board (D-12313-568) Schematic. 86
Controlled, Special, and Switched Solenoids 87
Power Wiring Diagram 88
Game Circuit Boards Interboards Signals . . . . . 89 - 90
Diagnostic Test Flowchart . . . . . 91 - 92

Section 1
Game Operation & Test Information

- EARTHSHAKER (System 11B) ROM Summary
- Pinball Game Assembly Instructions
- Game Play
- Game Status Displays
- Game Adjustment Procedure
- Game Pricing
- Test/Diagnostic Procedures

EARTHSHAKER (System 11B) ROM Summary

IC	DESCRIPTION	TYPE	IDENTIFIER	BOARD	PART NUMBER
Game ROM 1	32K x 8 ROM	27256	U27	CPU	A-5343-568-2
Game ROM 2	32K x 8 ROM	27256	U26	CPU	A-5343-568-1
Sound ROM 1	32K x 8 ROM	27256	U21	CPU	A-5343-568-4
Sound ROM 2	32K x 8 ROM	27256	U22	CPU	A-5343-568-3
Music/Speech ROM 1	32K x 8 ROM	27256	U4	Audio	A-5343-568-5
Music/Speech ROM 2	32K x 8 ROM	27256	U19	Audio	A-5343-568-6

NOTICE

To order a replacement ROM from your authorized WILLIAMS ELECTRONICS GAMES distributor, specify: (1) part number (if available); (2) ROM label color; (3) ROM level (number) on the label; (4) which game the ROM is used in.

CONNECTOR & COMPONENT IDENTIFICATION

WILLIAMS ELECTRONICS GAMES uses a special technique to identify connectors and . Each plug or jack receives a prefix number (which identifies the circuit board), a letter, and a number. J-designations refer to the male part of a connector. P-designations refer to the female part of a connector. For example, 1J1 designates jack 1 of board 1 (a CPU Board jack); 3P6 designates plug 6 of board 3 (a Power Supply Board plug). Identifying the specific pin number of a connector involves a hyphen, which separates the pin number from the plug or jack designation. For example, 1J1-3 refers to pin 3 of jack 1 on board 1.

Other game components may also have similar prefixes preceding their designator to clarify their locations or related circuit.

Prefix numbers for the System 11B circuit boards and other major assemblies are listed below. A prefix number may precede a component designator to identify its associated unit (e.g., connector 1J1).

1 - CPU	5 - Aux Power Driver	9 - Insert Board
2 - Master Interconnect	6 - Backbox	10 - Audio
3 - Backbox Power Supply	7 - Cabinet	
4 - Alphanumeric Display	8 - Playfield	

EARTHSHAKER CIRCUIT BOARDS

System 11B Circuit Boards for **EARTHSHAKER** are in the backbox. They are accessible by unlocking the Backbox lock, removing the Backbox glass, unlatching the Insert Board (with lamps and the EARTHSHAKER Meter display), and swinging it open.

The Master Display Board is mounted on the back of the Speaker/Display Panel, just below the Insert Board. To access the Master Display Board, carefully lift the Speaker/Display Panel out of its bottom guide and lay it forward onto the top of the game cabinet.

Lamp circuit boards are mounted on the Playfield, the Insert Board, and on top of the Backbox under the EARTHSHAKER Dome.

CPU BOARD. The System 11B CPU Board (p/n D-11883-568) must be equipped with the ROMs specified in the **EARTHSHAKER** (System 11B) ROM Summary. CPU Board jumpers W1, W2, W4, W5, W7, W8, W11, W14, W16, W17, and W19 must be connected.

AUDIO BOARD. The Audio Board is p/n D-11581-568, including ROMs and microprocessor.

DISPLAY BOARD. The Alphanumeric Display Unit Board is p/n D-12232-1.

POWER SUPPLY BOARD. The Power Supply Board is p/n D-12246-568.

AUX POWER DRIVER BOARD. The Aux Power Driver Board is D-12247-559.

MASTER INTERCONNECT BOARD. The Master Interconnect Board is D-12313-568.

Figure 1 shows the locations of these circuit boards, as well as other devices especially located to make **EARTHSHAKER** a great game.

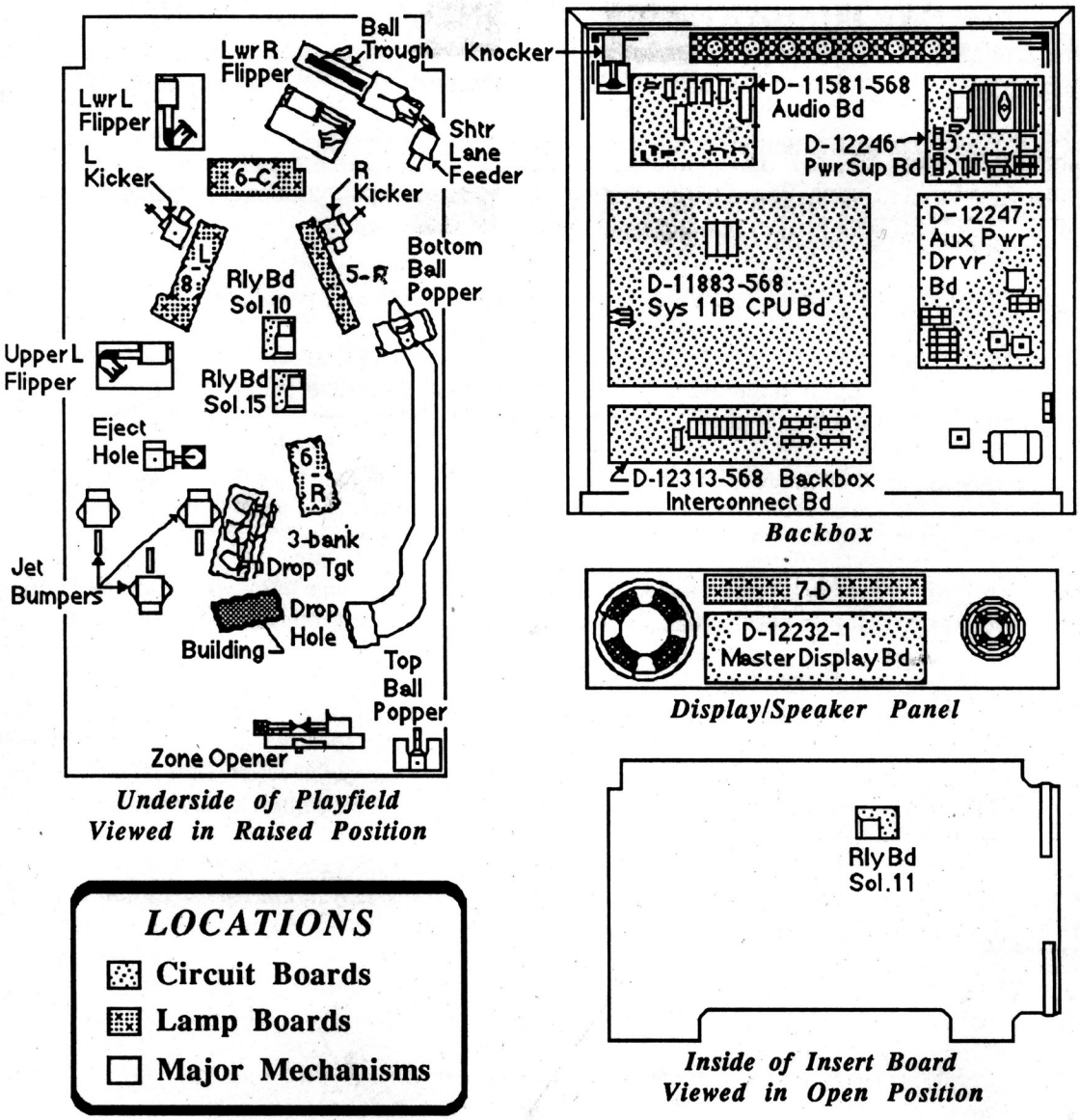

Figure 1. Locations Diagram - Game Circuit Boards and Major Mechanisms

EARTHSHAKER GAME CONTROL LOCATIONS

Figure 2 shows the locations of the following switches, except for the last two (CPU and Sound Diagnostic switches, which are shown in the Backbox portion of Figure 1 on the CPU Board).

The On-Off switch is on the bottom of the cabinet near the right front leg.

The Volume Control is on the left inner wall of the cabinet on the tilt mechanisms board. It is accessible by opening the coin box door.

The Credit switch is a pushbutton to the left of the coin door on the cabinet exterior.

GAME ADJUSTMENT/DIAGNOSTIC SWITCHES. **EARTHSHAKER** allows the operator to control all game adjustments, obtain bookkeeping information, and diagnose problems, using only three switches mounted on the inside of the coin door, along with the Credit button beside the coin door.

> ADVANCE, AUTO-UP/MANUAL-DOWN, and HIGH-SCORE RESET are the switches located on the inside of the coin door. Refer to the text discussing Game Status Displays and the Test/Diagnostic Procedures for details concerning button operation.

The Memory Protect switch is on the inside frame of the coin door. This interlock switch must be open to clear bookkeeping totals and to make game adjustments. It automatically opens, when the coin door opens.

Figure 1 shows the locations of the two CPU Board switches (left edge of CPU Board, Backbox View).

The CPU Diagnostic switch (SW 2) is the lower switch (of the two switches mounted on the left edge of the CPU Board) near a large, socketed microprocessor chip. This switch initiates the Memory Chip Test explained in the Test/Diagnostic Procedures.

The Sound Diagnostic switch (SW 1) is the upper switch of the two mounted on the left edge of the CPU Board. This switch initiates the Sound Section Test. Refer to the Test/Diagnostic Procedures.

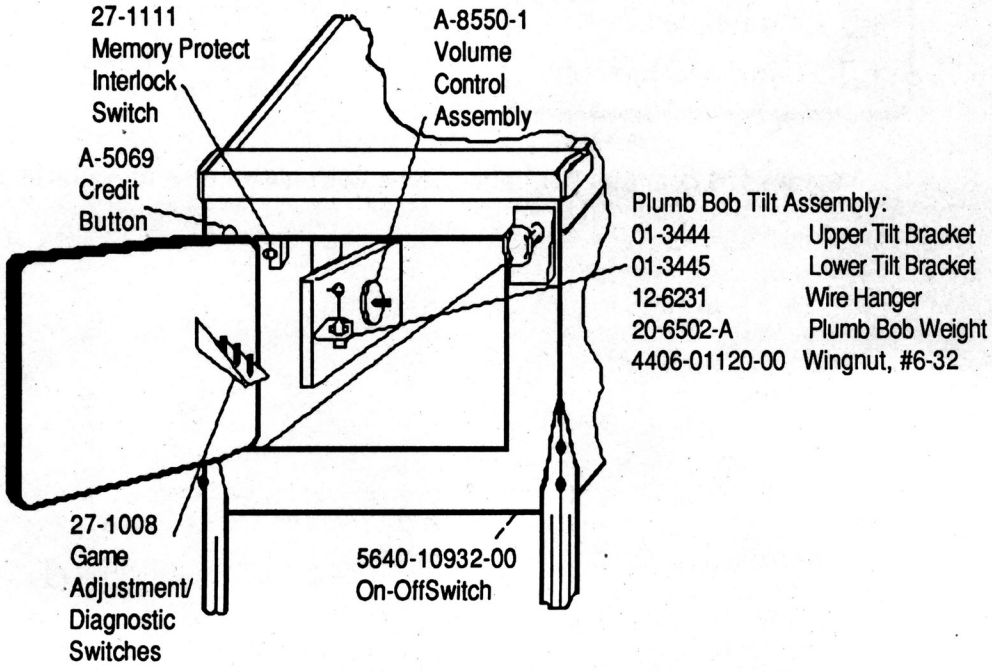

Figure 2. Pinball Game Controls Locations

PINBALL GAME ASSEMBLY INSTRUCTIONS

1. Open the shipping container; remove all cartons, parts, and other items, and set them aside.
2. Place cabinet on a support and attach rear legs (after installing leg levellers), using leg bolts. Leg levellers and leg bolts are both provided among the parts in the cash box.
3. Attach the front legs (after installing leg levellers), using leg bolts. See Figure 3 for details.

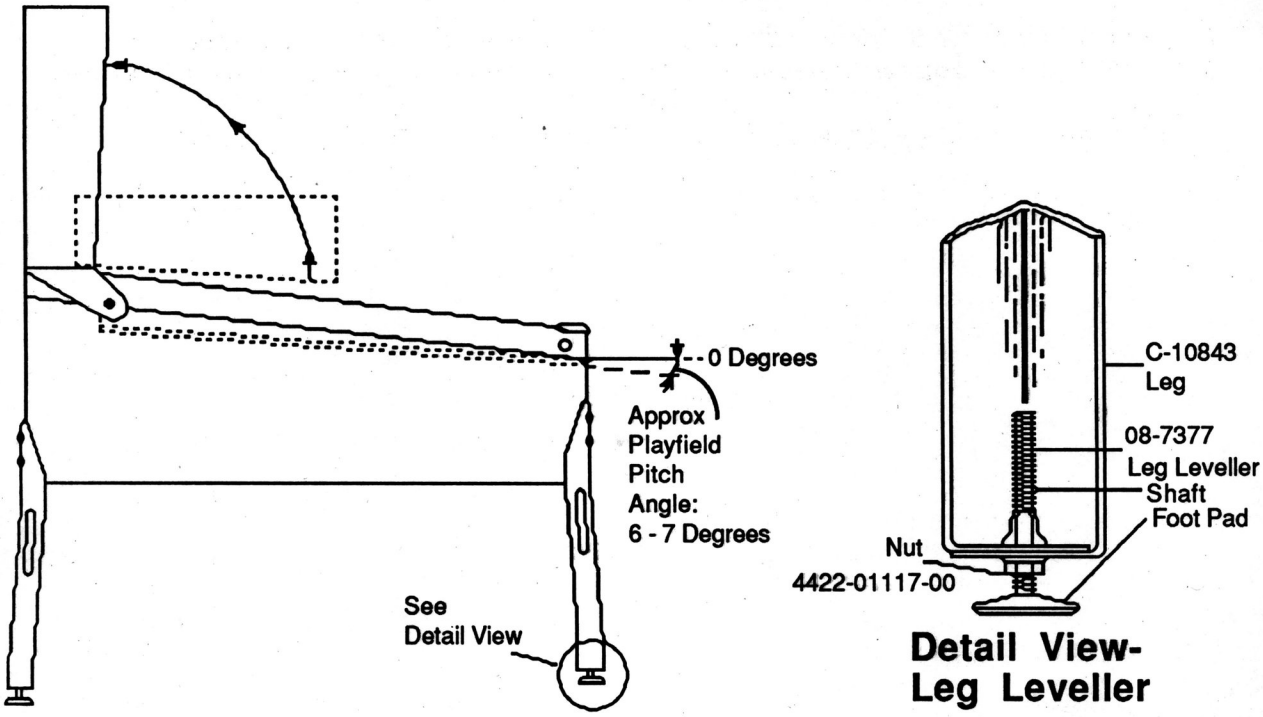

Figure 3. Pinball Assembly, Playfield Pitch Angle, and Leg Leveller Details.

CAUTION

Ensure that the interconnecting cables are free to move (not kinked or pinched). Be careful not to damage wires at any stage of the assembly process.

4. Raise the hinged backbox upright and stabilize it into position. Unlock the backbox, and remove the backbox glass, storing it carefully to avoid scratches. Remove the shipping block holding the Insert Board. Unlatch the Insert Board and open it, then remove shipping screw securing the Speaker/Display Panel. Lift the Speaker/Display Panel up and lay it forward on the playfield cabinet. This allows access to the bolt holes used for securing the backbox upright. Install the mounting bolts, split lockwashers, and flat washers through the bottom holes of the backbox into the threaded fasteners in the cabinet to secure the backbox. Install the Speaker/Display Panel, close and latch the Insert Board, and install the backbox glass, and lock the backbox.

WARNING

NEVER transport a pinball game with the hinged backbox erect. *Always* lower the backbox forward onto the playfield cabinet on a layer of protective material to prevent marring or damage and possible personal injury.

5. Extend each leg leveller *slightly* below the leg bottom, so that all four foot pads are extended about the same distance. Remove the cabinet from its support and place it on the floor.

6. Adjust the leg levellers for proper playfield level (side-to-side) *and* playfield pitch angle (incline) of approximately 6 degrees. (Again, it is recommended that these measurements be made ON the playfield, not the cabinet nor the playfield cover glass.) Tighten the nut on each leg leveller shaft to maintain this setting, as shown in Figure 3.

CAUTION

Playfield pitch angle adjustments can affect the operation of the plumb bob tilt, inside the cabinet. The plumb bob weight is among the parts in the cash box; the operator should install the weight and adjust this tilt mechanism for proper operation, after completion of the desired playfield pitch angle setting.

7. Move the game into the desired location; recheck the level and pitch angle of the playfield.
8. Verify that the ***required number*** of balls are installed in the game. (**EARTHSHAKER:** 3 balls.)
9. Clean and re-install the playfield cover glass. Prepare the game for player operation.

GAME OPERATION

WARNING

After assembly and installation at its site location, this game must be plugged into a properly grounded outlet to prevent shock hazard, and to assure proper game operation. DO NOT use a 'cheater' plug to defeat the ground pin on the line cord. DO NOT cut off the ground pin.

GAME OPERATION (Continued)

POWERING UP. With the coin door closed, plug the game in, and switch it ON, using the On-Off switch. In normal operation, the player 1 score display initially shows 00. Then, the game goes into the Attract Mode (playfield and backbox lamps flashing, sounds being heard, etc., if the operator does not change the Factory Setting).

Open the coin door and press the AUTO-UP/MANUAL-DOWN switch to MANUAL-DOWN. Press the ADVANCE button to begin the game test routine. Return to AUTO-UP and perform the entire test to verify that the game is operating satisfactorily.

NOTE

The SYSTEM 11B game program has a great capability to aid the operator and service personnel: At game Turn-On (and also at the beginning of the Test/Diagnostic Procedures), the player score displays now signal with a message, "Press ADVANCE for Report", that the game program has detected a possible problem with the game. Usually, this report indicates that at least one switch has NOT been actuated during ball play for 90 balls (≈ 30 games). However, the game program compensates the game play requirements affected by each disabled switch to allow 'nearly normal' play. This helps keep **EARTHSHAKER** earning good profits! More information is available in the Test/ Diagnostic Procedures text describing the Switch Testing.

ATTRACT MODE*. Playfield and backbox lamps blink. The player score displays exhibit a series of messages informing the player concerning:

A. Recent highest scores*;
B. A "custom message"
("**SURVIVE THE ... BIG QUAKE ... PLAY EARTHSHAKER**")*;
C. The score to achieve to obtain a Replay award*;

These (or similar) displays reappear occasionally, accompanied by sounds and music, until a player initiates game play by inserting a coin or, when credits are available, pressing the Credit button.

CREDIT POSTING. Insert coin(s). A sound is heard for each coin, and the player score displays show the number of credits purchased. So long as the number of maximum allowable credits* are *NOT* exceeded by coin purchase or high score, credits are posted correctly. However, after this maximum credits value is reached, posting of additional credits won (not purchased) by the player does *not* occur. ONLY posting of *purchased* credits occurs beyond the maximum credits value.

STARTING A GAME. Press the Credit button once. A startup sound plays, and the Credit amount shown in the player score display decreases by one. Player display 1 flashes 00 (until the first playfield switch is actuated), and the Player 4 display shows **ball 1**, except for 4-player games where the **ball #** shows in the individual player's display. Additional players may enter the game by pressing the Credit button once for each player, before the end of play on the first ball.

TILT. Actuating the Slam Tilt switch on the coin door inside the cabinet ends the current game; **EARTHSHAKER** then proceeds to the Game Over Mode. With the actuation of the playfield tilt switch, or the third closure* of the plumb bob tilt switch, the player loses the remaining play of that ball, but can complete the game.

END OF GAME. All earned scores and bonuses are awarded. If a player's final score exceeds the specified value, the player receives a designated award for achieving the current highest score. A random digit set* appears in the Match display. Credit* may be awarded, when the last two digits of any player's score display (1 through 4) match the random digits of the Match display. Match, high score, and game over sounds are made, as appropriate.

GAME OVER MODE. The GAME OVER display shows in the player score displays. Then, the high scores flash on the appropriate player score displays. The game proceeds to the Attract Mode.

* - operator-adjustable feature

EARTHSHAKER GAME PLAY

1. GOAL: The main object of Earthshaker play is to complete the Earthquake Institute's prediction for today's earthquake, leading to Multi-Ball™ play and the Jackpot score. The prediction is indicated by the lighted windows in the Earthquake Institute building.

1a. To complete each prediction, the player must visit the set of earthquake zones predicted for today. The zones are located throughout the playfield in the following arrangment: Zones 1, 2, 3, and 4 are standup targets; Zone 5 is the Eject Hole; Zone 6 is the loop under the Fault Zone (California-Nevada state maps); Zones 7 and 8 are the right and left return lanes; and Zone 9 is the Captive Ball. For the first two earthquakes, the zone visits can be in any order. For the next two earthquakes, the zone visits must be row-by-row, in any order within each row. Thereafter, the zone visits must be in numerical order. As the game progresses, more zones are predicted for quakes, and the patterns become harder to achieve.

1b. Upon completing all predicted zones, a 'lock' is enabled and the Bonus Multiplier increases. To 'lock' a ball, the first lock may be either up the right ramp, or down the drop hole. The second lock MUST be up the right ramp. As the player shoots the third ball, the two locked balls are released to begin 3-ball Multi-Ball™ play.

2. 3-BALL MULTI-BALL™: During Multi-Ball™, the player must first make the center ramp, to light the right ramp for Jackpot. (The Jackpot score is the lighted lamp beneath the player score displays.) Subsequent right ramp shots score the Quake trip score of 250,000 points.

3. QUICK MULTI-BALL™: When Quick Multi-Ball is lit, the Eject Hole (Zone 5) temporarily locks a ball. When the player shoots the next ball, 2-ball Multi-Ball play begins.

3a. During Quick Multi-Ball, a right ramp shot scores 1 Million points!

3b. During Quick Multi-Ball, if the player locks one ball, the second lock lights immediately, and the Bonus Multiplier increases, if it was not already lit. Locking the second ball during Quick Multi-Ball readies play for 3-ball Multi-Ball, which begins when the player shoots the third ball.

4. Ball Shooter Skill Shot: Two options are available, depending on the play conditions and the shooter's skill: 1) A skillful On-ramp shot can score 10,000; 25,000; 50,000; or 100,000 points, along with spotting the next earthquake zone, and lets play begin at the jet bumpers. 2) A strong On-ramp shot bypasses the first option possibilities, drops onto the center ramp exit to give a score of 25,000 points and 1 mile and, via passage through the left return lane, gives the player a shot at the center ramp before the timed interval expires.

5. Bonus Scoring: Both Outhole Bonus and Bonus Multipliers are cumulative throughout the game. Outhole Bonus scoring includes Miles earned x 1,000 x Bonus Multiplier + 20,000 x the number of trips to the Fault. (Earn Miles via the center ramp (1 Mile, or 2 Miles when lit by the left return lane; Matchup (see 11, following) awards 2 or 5 Miles; Right ramp awards 3 Miles and 1 Fault trip.

6. Escalating Scores: The Center Ramp, Drop Targets (Billboard), and Jet Bumpers all feature escalating scores per ball. The Center Ramp begins at 25,000, jumping next to 50,000, and increasing by 10,000 each time it is made, until the score reaches100,000. Drop Target scores for each 3-bank completion start at 50,000 and escalate by 10,000, until a peak of100,000 is reached; Each completion also advances the Jackpot score value. Jet Bumpers score: 1,000 when unlit; 2,000 when lighted; 3,000 when it is blinking; 5,000 when all are blinking. To advance the Jet Bumper lighting requires a Zone 6 shot (around the loop under the Fault (Cal-Neva state maps)).

7. MATCH-UP: Before the ball in the Drop Hole pops up to the right return lane, a Match-up award cycle occurs. The award is one of a possible 10 values: Score100,000 points; Spot a Zone; Complete the Building lamps; Light the Quick Multi-Ball; Light SPECIAL (outlanes); 3-bank Drop Targets Billboard for 100,000; Light all Jet Bumpers; 2 Miles; 5 Miles; or Award an Extra Ball. These possible values are displayed in the upper and lower player score display panels. When both panels display the same value, a Match-up occurs and the displayed value is awarded.

8. Captive Ball: The Captive Ball awards advance on two ways: Each center ramp shot advances it for a timed period; a Drop Hole shot increases the non-timed minimum value. Scores are 25,000; 50,000; 100,000; 150,000; and 250,000. Scoring the 250,000 causes the award to reset back to 25,000 and resets the timer to its original setting, and lights the Eject Hole for Quick Multi-Ball.

EARTHSHAKER GAME STATUS DISPLAYS

EARTHSHAKER provides the game owner/operator with a display of information concerning the game's bookkeeping and game play feature adjustments. Basically, three classes of information now become available in this status display mode: Id (Identification); Au (Audit); Ad (Adjustment). Each of the underscored two-letter abbreviations for these classes appears in the Player 3 score display, while the system microprocessor for the **EARTHSHAKER** game is displaying the items within each class.

Identification Information--Id

With the game turned on, the coin door open, and the AUTO-UP/MANUAL-DOWN switch in the AUTO-UP position, the operator can press the ADVANCE switch once, briefly. Player displays immediately change from the Attract Mode to the Game Status Display Mode. This is evident by the following display, shown in columnar form. The column headings refer to the various backbox displays.

Player 1	Player 2	Player 3	Player 4
EARTHSHAKER	**Id 00**	**568**	**L-x***

* x - indicates ROM revision level; e.g., 1 is initial issue; 2, 3, etc. for later revisions.

The game is named in the Player 1 score display. The game's identification number shows in the Player 2 score display and the ROM revision level appears in the Player 4 display. The Player 3 score display shows the status display mode in abbreviated form, *Id.* The Player 3 score display also shows the status display mode item (**00**) for this particular display.

Pressing ADVANCE once more causes the **Id 01** display to appear. This display describes which of the "Install" options is currently in effect. For example, if the YES option of the INSTALL FACTORY Adjustment Item (Ad 70) was last selected, *FACTORY SETTING* appears on the player score displays. Changing the setting of any other game adjustment item, after selecting the YES option for Ad 70 causes the display to change to *FACTORY ALTERED.* Similarly, if the operator selects the YES option for INSTALL HARD (Ad 65), the display indicates *HARD SETTING.* Changing a game adjustment item later then causes the display to show *HARD ALTERED.*

Audit Information--Au

While the AUTO-UP switch remains in the Up position, the operator can press the ADVANCE switch once, briefly, to begin the backbox displays of Audit (sometimes called "bookkeeping") Information. Fifty-one audit entries are now available. Calculation of the various factors is no longer necessary because the System 11B game program now performs all the mathematical factor computations. This information is intended to aid the owner/operator in evaluating how the game is performing in each location, by providing knowledge about which game features are receiving the most play. With this information, the owner/operator can determine whether adjusting the game features to other settings will contribute to increased game earnings.

The operator can press the ADVANCE button once to view each Audit Information display item. To proceed more rapidly through this information, the operator only has to press and hold the ADVANCE button. If a desired item is passed, the operator can use the MANUAL-DOWN switch position with the ADVANCE button to back up to the desired item.

The **EARTHSHAKER Audit Table** lists the 53 items of the Audit Information portion of the **EARTHSHAKER** Game Status Displays. Presentation of this Audit Information again utilizes the player score displays; however, the Player 1 and 2 displays are combined as a descriptive phrase. The light type below the table's column headings names the respective backbox displays where the information appears. Because the Player 4 display contains information which depends on game play, only a few example entries are shown in the table. The Credits display shows *Au* for all audit items, so its entry is omitted from the tabular listing. Detection of erroneous data affecting any of the counters used in these audit items causes the message, ERROR, to be displayed in the Player 3 display, during display of any audit item associated with that particular counter. (The program does not analyze the cause of the error; it merely alerts the operator of the error's existence by the message.)

EARTHSHAKER Audit Table

Audit Item (Player 3)	Descriptive Phrases (Player 1 and 2 Displays)	Audit Factor [1] Value (Player 4)
AU 01	LEFT COINS [chute next to coin door hinge]	432
02	CENTER COINS	0
03	RIGHT COINS	398
04	PAID CREDITS	830
05	TOTAL PLAYS	
06	TOTAL FREE (Total Free Plays)	
07	PERCENT FREE (% Free Plays)	
08	REPLAY AWARDS	
09	PERCENT REPLAY (% Replay Awards)	
10	SPECIAL AWARDS	
11	PERCENT SPECIAL (% Special Awards)	
12	MATCH AWARDS	
13	HSTD (High Score to Date) CREDITS	
14	PERCENT HSTD (% HSTD Credits)	
15	EXTRA BALLS	
16	PERCENT EX. BALL (% Extra Balls)	
17	AV. BALL TIME (Average Time in Seconds)	
18	MINUTES OF PLAY (Minutes of Play)	
19	BALLS PLAYED	
20	REPLAY1 AWARDS	
21	REPLAY2 AWARDS	
22	REPLAY3 AWARDS	
23	REPLAY4 AWARDS	
24	1 PLAYER GAMES	
25	2 PLAYER GAMES	
26	3 PLAYER GAMES	
27	4 PLAYR. GAMES	
28	BURN IN CYCLES	
29	LEFT OUTLANE (# of DRAINS via L Outlane)	
30	RIGHT OUTLANE (# of DRAINS via R Outlane)	
31	HEAD FOR SHELTER (# of times SHELTER occurred)	
32	JACKPOTS (# of times Jackpot was awarded)	
33	3-BALL MULTI-BALLS (# of times for 3-Ball Multi-Ball™ play)	
34	100K CENTER RAMP (# of times 100K awarded via ramp)	
35	TRIPS TO FAULT (# of Trips to Fault plays)	
36	MILES TRAVELED (# of Miles Travelled)	
37	2-BALL MULTI-BALLS (# of times for 2-Ball Multi-Ball™ play)	
38	MILLION SHOTS (# of Million Shots via 2-Ball Multi-Ball™ play)	
39	H.S.RESET COUNTER	
40	0.0-0.4 MIL. SCORE (# of games <500K)	
41	0.5-0.9 MIL. SCORE (# of games ≥500K, <1M)	
42	1.0-1.9 MIL. SCORE (# of games ≥1M, <2.0M)	
43	2,0-2.9 MIL. SCORE (# of games ≥2.0M, <3.0M)	
44	3.0-3.9 MIL. SCORE (# of games ≥3.0M, <4.0M)	
45	4.0-5.9 MIL. SCORE (# of games ≥4.0M, <6.0M)	
46	6.0-7.9 MIL. SCORE (# of games ≥6.0M, <8.0M)	
47	8.0-99.9 MIL. SCORE (# of games ≥8.0M, <100.0M)	
48	FIRST REPLAY IS x,xxx,xxx	
49	AVG. GAME x.xx MIN (Avg Game in Minutes)	
50	BONUS 2X REACHED (# of times for Bonus 2X)	
51	BONUS 2X REACHED (# of times for Bonus 2X)	
52	BONUS 2X REACHED (# of times for Bonus 2X)	
53	BONUS 2X REACHED (# of times for Bonus 2X)	
54		
55		

NOTE:
1. The numbers shown in this column for Items 1 through 4 are examples. Entries for all items depend on the amount of play; thus, they will vary from location to location.

EARTHSHAKER GAME STATUS DISPLAYS (Continued)

EARTHSHAKER Game Adjustment Table

Adjustment Item (Player 3)	Descriptive Phrases (Player 1 and 2 Displays)	Factory Setting (Player 4)
Ad 01	AUTO REPLAY [1] *or*	10 (%)
	FIXED REPLAY [1]	SCORES [1]
02	REPLAY START (or REPLAY LEVEL 1) [1]	2,500,000
03	REPLAY LEVELS (or REPLAY LEVEL 2) [1]	01 (or OFF)
04	(REPLAY LEVEL 3) [1]	(see text)
05	(REPLAY LEVEL 4) [1]	(see text)
06	REPLAY AWARD	Credit
07	SPECIAL AWARD	Credit
08	MATCH FEATURE [Off, 1-50%]	10 (%)
09	BALLS / GAME	03
10	TILT WARNING	03
11	MAXIMUM EX. BALL	04
12	MAXIMUM CREDITS	10
13	HIGHEST SCORES	On
14	BACKUP HI. SCR.1	5,000,000
15	BACKUP HI. SCR. 2	4,500,000
16	BACKUP HI. SCR. 3	4,000,000
17	BACKUP HI. SCR. 4	3,500,000
18	HI. SCR.1 CREDITS	01
19	HI. SCR.2 CREDITS	01
20	HI. SCR.3 CREDITS	01
21	HI. SCR.4 CREDITS	01
22	H. S. RESET EVERY	3,000
23	FREE PLAY	NO
24	U.S.A. 1 COINAGE (1 COIN 1 PLAY) [2,3,6]	
25	LEFT UNITS	01
26	CENTER UNITS	04
27	RIGHT UNITS	01
28	UNITS/ CREDIT	01
29	UNITS/ BONUS	00
30	MINIMUM UNITS	00
31 - 48	Game-specific Adjustments (detailed in text and the Game Adjustment Setting Comparison Table)	
49 [4]	CUSTOM MESSAGE	ON
50	SW. ALARM KNOCKER	YES
51 - 52	Coinage Adjustments	
53 -58 [5,6]	Special Pricing Adjustments- See text for 53-58 details.	
59 [5]	INSTALL ADDABALL	NO
60 [5]	INSTALL 5-BALL	NO
61 [5]	INSTALL NOVELTY	NO
62 [5]	INSTALL EX. EASY	NO
63 [5]	INSTALL EASY	NO
64 [5]	INSTALL MEDIUM	NO
65 [5]	INSTALL HARD	NO
66 [5]	INSTALL EX. HARD	NO
67	AUTO BURN-IN	NO
68	CLEAR COINS	NO
69	CLEAR AUDITS	NO
70 [7]	INSTALL FACTORY	NO

NOTES:

1. Automatic Replay percentage value range is adjustable from 5 to 50%, via the Credit button. Item 02 permits changing the factory setting value for Replay Start Level (valid for next 500 games played). Item 03 permits setting up to four replay levels, with values as detailed in text describing item 03.

   For Fixed Replay Scores, set Auto Replay value to 1 less than 5(%) via the Credit button. Go to items 02, 03, 04, and 05; install their replay level scores. Turn off any replay level by setting 00 as its value.
2. Phrase in parentheses is Factory Setting. Phrase appears in player 2 and 4 displays. Press Credit button to change setting of the game pricing of item 24.
3. To change country OR coinage setting, press Credit button to obtain 16 Standard settings, followed by a Custom Setting. The Custom Setting activates items 25 through 30. When a Standard Setting is used, items 25 through 30 are set automatically, and cannot be changed.
4. To install Custom Message, press flipper button for alphabet and special characters. Press Credit button for next message letter or character.
5. Special Preset Adjustment, whose effects are noted in the Game Adjustment text.
6. Refer to Pricing Table and text describing these items.
7. Approximates Ad 64, yet includes all factors listed in Factory Setting column, not just Ad 31 through 47 provided by Ad 64.

EARTHSHAKER GAME STATUS DISPLAYS (Continued)

Adjustment Information--Ad
At end of the Audit Information presentation, with the AUTO-UP switch in the Up position, the operator can press the ADVANCE button to proceed to the Adjustment Information portion of the EARTHSHAKER Game Status Displays, as listed in the **EARTHSHAKER Game Adjustment Table**.

The operator can press the ADVANCE button once to view each Adjustment Information display item. To proceed more rapidly through this information, the operator only has to press *and hold* the ADVANCE button. If a desired item is passed, the operator can use the MANUAL-DOWN switch position with the ADVANCE button to back up to the desired item.

The **EARTHSHAKER Game Adjustment Table** lists the 70 items of the Adjustment Information portion of the **EARTHSHAKER** Game Status Displays. Presentation of the displays is similar to that for the Audit Information (that is, the player 1 and 2 displays combine as a descriptive phrase; the light type below the column headings names the respective backbox displays where the information appears, etc.). The Player 3 display shows *Ad* for all 70 adjustment items, so its entry is omitted from the tabular listing.

The **EARTHSHAKER Game Adjustment Setting Comparison Table** shows the five game 'difficulty' Adjustment Items (ranging from Ad 62 - Extra Easy through Ad 66 - Extra Hard). Installing any one of these 'difficulty' Adjustments causes the values shown for each of the included game play Adjustment Items to be installed as a group, changing the level of play from one difficulty level to another. The owner/operator can use the information provided by the Audit Table items to determine whether the 'difficulty level' for this game in this location needs to change to obtain a higher level of earnings from the game or to provide a greater challenge to the location's players.

Once the 'difficulty level' is changed, a careful review of the Audit Items will reveal whether the change has achieved this higher-earnings goal. Sometimes, one (or more) of the Adjustment Items needs further change to keep the number of plays high, while still keeping the earnings level high. "Fine-tuning" of the game's Adjustment Items is a key feature of Williams Electronic Games products.

EARTHSHAKER Game Adjustment Setting Comparison Table

American & French Games							
Adj #	Adj Description	Extra Easy Ad 62	Easy Ad 63	Medium (Factory) Ad 64	Hard Ad 65	Extra Hard Ad 66	Not Applicable
31	Extra Ball Miles	7	9	12	15	20	25
32	2nd E. Ball Miles	35	50	60	69	75	75
33	Rematch Timer	Slow	Slow	Slow	Slow	Fast	Off
34	Captv. Ball Timer	10 sec	9 sec	7 sec	5 sec	5 sec	4 sec
35	Cen. Ramp Timer	10 sec	8 sec	5 sec	4 sec	4 sec	3 sec
36	Jackpot Progress	Easy	Carries	Resets	Resets	Resets	Resets
37	Spinner Timer	15 sec	12 sec	10 sec	8 sec	7 sec	6 sec
38	Jet Bumper Start	All On	2 On	1 On	All Off	All Off	All Off
39	Building Difficulty	Easy	Easy	Normal	Hard	Hard	Hard
40	Quick Multi-Ball	Carries	Carries	Resets	Resets	Resets	Resets
43	Lock Via Shelter	Always	Always	Always	Never	Never	Never
44	Max. Captve. Locks	04	04	04	03	03	01
45	Extra Ball Miles % (beg.)	40	35	30	25	20	15
46	Game Adj 16	Yes	Yes	Yes	No	No	No
47	Game Adj 17	55	65	75	80	99	99
Adj #	Adj Description	Not Applicable	Extra Easy Ad 62	Easy Ad 63	Medium (Factory) Ad 64	Hard Ad 65	Extra Hard Ad 66
German & European Games							

GAME ADJUSTMENT PROCEDURE

Adjustment Items 01 through 70

The coin door must be open to access the Game Adjustment/Diagnostic switches. All readings and setting changes require operation of these coin door switches. Some setting changes utilize the Credit button; some also use the flipper button(s). *Additional text describing the game adjustment items follows this procedure; the value of the Factory Setting for each Game Adjustment item is in the preceding* **EARTHSHAKER Game Adjustment Table.**

1. Use AUTO-UP and press ADVANCE. The Id 00 display initially appears. Press ADVANCE until the Player 3 display indicates **Ad 01.** If the factory setting has not changed, the Player 1 and 2 Score displays indicate AUTO REPLAY, and the Player 4 display shows 10%, indicating a 10% replay percentage. (The game program adjusts itself automatically, as discussed in the following text concerning the 'details' about Adjustment Item 01.)

2. To reach a higher item number (in the Player 3 display), use AUTO-UP and press ADVANCE. To return to a previous item number, use MANUAL-DOWN and press ADVANCE.

3. With the desired Game Adjustment Item number showing in the Player 3 display, increase the setting value (or select another option) shown in the Player 4 display by using AUTO-UP and pressing the Credit button. Repeat this step for each item, until all changes to the factory settings for the Game Adjustment Items have been made. The preceding Game Adjustment Table consolidates the Factory Settings into one grouping.

   (The same procedure can be used for Audit Items. To zero **Au 01 - 04** (concerning the coin chutes and the total coins), the operator can proceed to item 68, Clear Coins, and press the Credit button to obtain the YES option. The operator then presses the ADVANCE button and notes the "DONE" display, which verifies that the entry values for items 01 through 04 of the Audit Items are now reset to zero.)

   For example, the operator may desire to change the degree of game play difficulty from the Factory Setting (equivalent to the Install Medium [Ad 64] difficulty, along with a number of other automatically installed settings, as shown in the right column of the Game Adjustment Table) to another difficulty more suitable for the players at a particular game site. Four other 'automatic' play difficulty settings (Ad 62 - Ad 66) are available, each of which, if selected, installs all the adjustments listed for that difficulty in the Game Adjustment Setting Comparison Table, which precedes the 'details' text.

4. To proceed rapidly through the entire adjustments series, press *and hold* ADVANCE, until **Ad 70** shows in the Player 3 display. From item 70, you can: (A) return to the Game-Over Mode; or (B) restore factory settings and zero audit (bookkeeping) totals. Perform either of the following, as desired:

   A. To reach Game-Over Mode, use AUTO-UP and press ADVANCE once. **EARTHSHAKER** now goes to the Game-Over Mode.

   B. To restore the Factory Settings for Game Adjustment Items (as listed in the Game Adjustments Table), zero all audit (bookkeeping) totals, *and* return to Game-Over Mode, use AUTO-UP or MANUAL-DOWN to display Ad 70 in the Player 3 display. Press the Credit button to display the YES option in the Player 4 display. Using AUTO-UP, press ADVANCE once. **EARTHSHAKER** now zeroes ALL Audit Item totals and changes ALL Game Adjustment Items back to those originally selected as Factory Settings. It then shows the operator a message ("FACTORY SETTING") that this has occurred. (A problem in the Memory Protection circuit or closing the coin door will cause the message "ADJUST FAILURE" to appear.) Press ADVANCE once more to return to the Game-Over Mode.

GAME ADJUSTMENT PROCEDURE (Continued)

Details of Adjustment Items 01 through 70

01 Auto Replay (or Fixed Replay)
Of the two options, AUTO REPLAY is the percentage of replays automatically awarded per game. The game program aids a pinball's initial installation by causing a comparison of the value of the Replay Level to the value of all players' scores every 50 games for the first 1,000 games. At each comparison, the program increases (or decreases) the Replay Level by an amount necessary to achieve the replay percentage specified either via the factory setting or later operator selection. (After the first 1,000 games, the comparison occurs after every 500 games. The adjustment value is 100K, for this (and each subsequent) comparison.) Use the Credit button to change the percentage within the range of *5* to *25* (%), with the value increasing using AUTO-UP (or decreasing using MANUAL-DOWN). The next Credit button change below 5%, selects the FIXED REPLAY option.

For AUTO REPLAY, Ad 02 provides the Starting Replay Level (Player 1 and 2 displays show REPLAY START). Ad 03 provides the number of replay levels (01, 02, 03, or 04). **EARTHSHAKER** then proceeds to Ad 06 automatically.

For FIXED REPLAY, Ad 02 is the first replay level (REPLAY LEVEL 1). Ad 03, 04, and 05 are the other replay levels.

02 Starting Replay Level (or Replay Level 1)
For AUTO REPLAY (refer to Ad 01), the initial Factory Setting is listed in the Game Adjustment Table. The range of settings is *800,000* through *4,000,000* (by increments of 100,000 with AUTO-UP or decrements of 100,000 with MANUAL- DOWN).

For FIXED REPLAY, the operator can enter the value to be used for the first fixed replay score level via the Credit button. The range of settings is: *OFF; 100,000* through *9,900,000* (by increments of 100,000 with AUTO-UP, or decrements of 100,000 with MANUAL-DOWN).

03 Replay Levels (or Replay Level 2)
For AUTO REPLAY (refer to Ad 01), this is the number of replay levels in a game. The option range is *one, two, three, or four* replay level(s). When the operator chooses two replay levels, **EARTHSHAKER** automatically adjusts the second replay level to be twice the value selected for Ad 02, the starting replay level. Choosing three or four replay levels automatically adjusts their replay levels to three times or four times the Ad 02 value.

For FIXED REPLAY, the technique of value entry and the range of settings are identical to those of Ad 02.

04 (Replay Level 3)
For AUTO REPLAY, this Adjustment Item is not applicable. **EARTHSHAKER** automatically bypasses this adjustment.

For FIXED REPLAY, the technique of value entry and the range of settings are identical to those of Ad 02.

05 (Replay Level 4)
For AUTO REPLAY, this Adjustment Item is not applicable. **EARTHSHAKER** automatically bypasses this adjustment.

For FIXED REPLAY, the technique of value entry and the range of settings are identical to those of Ad 02.

06 Replay Award

For either AUTO REPLAY or FIXED REPLAY (Ad 01), the operator can select the form of the award automatically provided when the player exceeds any Replay Level (Automatic or Fixed). The choices are:

Credit - Reaching each replay level obtains a credit (free game).
Ball - Reaching each replay level obtains an extra ball.
Audit - Reaching each replay level obtains nothing to the player; it does increase the entry value of the Audit Item(s) maintaining a tally of these awards (Au 08, and Au 20 through 23, as applicable).

07 Special Award

The operator can select the form of the award automatically provided when the player scores a Special. The choices are:

Credit - Scoring each Special, when lit, obtains a credit (free game).
Ball - Scoring each Special, when lit, obtains an extra ball.
Score - Scoring each Special, when lit, obtains a score advance of 100,000 points to the player.

08 Match Award

The operator can select (via the Credit button) the desired percentage for the Match action occurring at the completion of each game. The choices are:

50%

1%-50%- 1% is 'hard'; 50% is 'extremely easy'. During Match action, the game selects a random two-digit number at end of game and compares each player's score for an identical two digits in the rightmost two positions. A matching of the two digits results in the award of a credit.
Off - The MATCH display does not operate at completion of the game; no award is given.

09 Balls / Game

The operator can define a "game" by specifying the number of balls to be played. The range of this setting is *1* through *9.*

10 Tilt Warning

The operator can specify the number of total actuations of the plumb bob and playfield tilt mechanisms that can occur before the game is "tilted". The range of this setting is *1* through *5.*

11 MaximumExtra Balls

The operator can choose (via the Credit button) the number of Extra Balls to be awarded to a player. The range of this setting is:

00 - NO extra ball play; displays a message, NO EX. BALL. A score is awarded in lieu of the Extra Ball.
1 -9 Ex Balls - 1 through 9 Extra Balls are awarded.

12 Maximum Credits

The operator can specify the maximum number of credits the game can accumulate, either through game play awards or coin purchases. The range of settings is *5* through *10.* Reaching the specified setting prevents the award of additional credits by game play. Coin purchases do continue to accumulate and are displayed.

NOTE

Whenever the number of credits is less than the specified maximum credits, any credits obtained by coin purchase or game awards (High Score, Match, Replay Levels, etc.) will be accumulated even though they exceed the maximum value. Thereafter, no additional credits can be accumulated, until the credit total is reduced below the specified maximum setting.

13 Highest Scores

The operator can specify (via the Credit button) whether the game is to maintain a record of the four highest scores achieved to date. The choices are:

Off - NO high scores are recorded.
On - The four highest scores are stored in memory for use by Game Adjustment 22.
Auto - The four highest scores are stored in memory for use in a game program subroutine associated with Game Adjustment 22.

14 Backup High Score 1

The operator can set the Backup High Score value in the Player 1 Score display, using the Credit button. The game automatically restores this value, when the operator presses, and holds, the HIGH SCORE RESET switch, or when an automatic High Score Reset event (Ad 22) occurs.

15 Backup High Score 2

This adjustment is similar to Ad 14, except that this applies to the Player 2 Score display. The adjustment technique is identical to Ad 14. It is also restored as described for Ad 14.

16 Backup High Score 3

This adjustment is similar to Ad 14, except that this applies to the Player 3 Score display. The adjustment technique is identical to Ad 14. It is also restored as described for Ad 14.

17 Backup High Score 4

This adjustment is similar to Ad 14, except that this applies to the Player 4 Score display. The adjustment technique is identical to Ad 14. It is also restored as described for Ad 14.

18 Credits for Highest Score 1

The operator can select the number of credits to be awarded, by using the Credit button, whenever a player exceeds the previous Highest Score. The range of this setting is *00* through *10.* A variation to this award occurs, when the setting of Ad 06 is Coil. (This permits a ticket or token dispenser to provide the award, when applicable.)

19 Credits for Highest Score 2

This adjustment is similar to Ad 18, except that this applies to the player's exceeding the second highest score. The Credit button adjustment technique is the same as for Ad 18. The range of this setting is *00* through *03.*

20 Credits for Highest Score 3

This adjustment is similar to Ad 18, except that this applies to the player's exceeding the third highest score. The Credit button adjustment technique is the same as for Ad 18. The range of this setting is *00* through *03.*

21 Credits for Highest Score 4
This adjustment is similar to Ad 18, except that this applies to the player's exceeding the fourth highest score. The Credit button adjustment technique is the same as for Ad 18. The range of this setting is *00* through *03*.

22 Automatic High Score Reset
The operator can specify (via Credit button) that the game will provide an automatic reset of the displayed "Highest Scores", and the number of games to be played before the reset occurs. (Audit item 39 displays the games remaining before the reset.) The values provided upon reset are those selected by the operator in Ad 14 through 17, the Backup High Scores. The range of this setting is *Off* (to disable this adjustment), and *1,000* to *24,750* games (in increments of 250).

23 Free Play
The operator can select (via the Credit button) whether a player can operate the game without a coin (free play) or with a coin. The choices are:

No - A coin is necessary for game play.
Yes - Game play is free; no coin is required.

24 Coinage Selections
The operator can specify (via the Credit button) any of the 16 Standard Settings for game pricing, each of which exhibits a message identifying the country and the number of coins required and the number of games that the coin requirement purchases. Choosing a Standard Setting permits the game to omit items Ad 25 through 30, which are adjustments allowing for a special custom coinage setting.

Following the last Standard Setting is a Custom Coinage Setting, which allows the operator to utilize Ad 25 through 30 in establishing a special coinage setting. A message, CUSTOM COINAGE, indicates that the operator can enter the appropriate values into the Ad 25 through 30 adjustment items.

The values for Ad 25 through 30 of each Standard Setting, as well as other possible values for the Custom Coinage Setting are shown in the **Pricing Table.**

25 Left Chute Coin Units
The operator can specify (via the Credit button) the number of coin units purchased by a coin passing through the left coin chute.

26 Center Chute Coin Units
The operator can specify (via the Credit button) the number of coin units purchased by a coin passing through the center coin chute.

27 Right Chute Coin Units
The operator can specify (via the Credit button) the number of coin units purchased by a coin passing through the right coin chute.

28 Units Required for Credit
The operator can define (via the Credit button) the number of coin units required to obtain 1 Credit. A coin unit counter in the game program totals the number of coin units purchased through all coin chutes prior to each game. If the total number of coin units purchased exceeds the 1 Credit factor by a multiple (or more, coin units) of the specified Units per Credit value, the Credits display shows the proper number of Credits. The coin unit counter retains any remaining coin units, until the start of a game; then, the coin unit counter is cleared (its contents are zeroed).

29 Units Required for Bonus
The operator can specify (via the Credit button) that 1 additional Credit is to be indicated in the Credits display, when a certain number of coin units are accumulated.

30 Minimum Units Required for any Credits Posted
The operator can specify that NO Credits are to be posted (indicated in the Credits display), until the credit units counter reaches a particular value.

The System 11B game program defines the following 18 Adjustment Items as "game-specific"; that is, they are unique for each game. The Game Designer/Engineer/Programmer team members work together to use these as controlling factors for game play. By varying the setting of these Adjustment Items, it is possible to "fine-tune" a game to suit a particular location, enabling the owner/operator to reap maximum earnings, while still providing the players with sufficient challenge to keep them playing.

GAME ADJUSTMENT PROCEDURE (Continued)

31 EXTRA BALL MILES

The operator can specify (via the Credit button) the number of miles that the player must 'travel' (earn) before the Extra Ball award is given. The range of this adjustment is *OFF* (Adjustment Disabled); *2* (Very Liberal) through *35* (Very Conservative).

32 2nd E. BALL MILES

The operator can specify (via the Credit button) the number of miles that the player must 'travel' (earn) before a *Second* Extra Ball award is given. The range of this adjustment is *OFF* (Adjustment Disabled); *10* (Very Liberal) through *69* (Very Conservative).

33 REMATCH TIMER

The operator can choose (via the Credit button) the RATE at which the Rematch Timer operates. The range of this setting is *OFF* (Adjustment disabled; Very Conservative); *FAST* (Conservative); and *SLOW* (Liberal).

34 CAPTIVE BALL TIMER

The operator can choose (via the Credit button) the Time Limit for flashing the Captive Ball shot. The range of this setting is *3 second* (Conservative) through *20 seconds* (Liberal).

35 CENTER RAMP TIMER

The operator can specify (via the Credit button) the Time Limit for blinking the 'Earthquake View (center) Ramp shot. The range of this setting is *1 second* (Conservative) through *20 seconds* (Liberal), or *OFF* (Super Liberal).

36 JACKPOT PROGRESS

The operator can choose (via the Credit button) the method for handling the player's progress toward the Jackpot . The range of this setting is *CARRIES* (Liberal; progress carries in memory during each Multi-Ball™); *RESETS* (Conservative; progress resets at start of each Multi-Ball™); and *EASY* (Very Liberal).

37 SPINNER TIMER

The operator can choose (via the Credit button) the Time Limit for lighting the Spinner shot. The range of this setting is *1 second* (Conservative) through *20 seconds* (Liberal).

38 JET BUMPER START

The operator can choose (via the Credit button) the manner of lighting the Jet Bumpers at Ball Start. The range of this setting is *ALL OFF; 1 ON; 2 ON; ALL ON; 1 BLINK; 2 BLINK; ALL BLINK.*

39 BUILDING DIFFICULTY

The operator can choose (via the Credit button) the degree of difficulty for the Earthquake Institute (Building) scoring. The range of this setting is *EASY: NORMAL;* and *HARD.*

40 QUICK MULTI-BALL

The operator can choose (via the Credit button) the method of handling the Quick Multi-Ball™ play. (Quick Multi-Ball™ allows the Eject Hole (playfield left middle) to 'lock' (retain) a ball toward the achievement of Multi-Ball™ play.) The choices are:

RESETS - (Conservative) The capability of a 'lock', indicated by a lighted LOCK lamp, is reset at the end of each Multi-Ball™ play.

CARRIES - (Liberal) The 'lock' capability 'carries ' (remains in memory) forward tomake the next Multi-Ball™ play easier to achieve.

GAME ADJUSTMENT PROCEDURE (Continued)

41 QUAKE INTENSITY
The operator can choose (via the Credit button) the amount of shaking during the Earthquake. The choices are:

STREET - (Moderate) The game vibrates with moderate movement.
OFF - The shaker motor is disabled; no quake vibration occurs.
ARCADE - (Maximum) The game movement is maximum.

42 ATTRACT MODE SOUNDS
The operator can choose (via the Credit button) whether sounds are heard during the Attract Mode. The choices are *On* (Sounds are heard) or *Off* (No sounds).

43 LOCK VIA SHELTER
The operator can select (via the Credit button) whether the Shelter 'locks' (retains) a ball for Multi-ball™ play after the first "Lock" is enabled. The choices are:

ALWAYS - (Liberal) The Shelter 'lock' occurs during every Multi-Ball™ play.i
NEVER - (Very Conservative) The ball simply passes through the Shelter and is never 'locked'(retained).
1st LOCK - (Conservative) The Shelter 'lock' occurs only during the first Multi-Ball™ play.

44 MAXI(MUM) CAPT(I)VE LOCKS
The operator can choose (via the Credit button) the Maximum number of Captive Locks that can occur. The range of this setting is from *1* (Conservative) through *4* (Liberal).

45 EXTRA BALL MILES AUTO %
The operator can choose (via the Credit button) whether to enable the Automatic Percentaging of Ad 31 by selecting the starting percentage or to disable this Game Adjustment. The choices are *Fixed* (Disabled) or *5 - 50%* (Enabled, with beginning percentage).

46 CAPTIVE BALL SPOTS
The operator can choose (via the Credit button) whether the Captive Ball shot spots a 'Building Zone' (Earthquake Institute lamp). The choices are:

YES - The Captive Ball shot spots a 'Building Zone'.
NO - The Captive Ball Shot does NOT spot a 'Building Zone'.

47 SPECIAL AT ____ MILES
The operator can choose (via the Credit button) the number of miles that must be earned to light the Special lamp (left and right Outlanes). The range of this setting is *50 Miles* (Liberal) through *99 Miles* (Conservative), or *OFF* (Disabled).

48 MATCH / LOCKS
The operator can choose (via the Credit button) the setting of this adjustment which affects the allowed Matches / Locks. The choices are *Fast* (Conservative) and *Slow* (Liberal).

GAME ADJUSTMENT PROCEDURE (Continued)

49 Custom Message

The operator can choose (via the Credit button) whether to display a message during the Attract Mode. (When display of a message is selected, the operator can either utilize the message provided or change the message.) Three choices are available:

1 - Display a message during the Attract Mode. The Player 4 display shows this choice as ON. The 3-line message provided is:

SURVIVE THE ... BIG QUAKE ... PLAY EARTHSHAKER.

2 - Do NOT display a message during the Attract Mode. (Player 4 shows OFF.)

3 - The Player 4 display shows this choice as CHANGE. The operator can enter a special ("custom") message, as follows:

A. Press ADVANCE once. The operator can now enter as many as three 14-character lines for display during the Attract Mode.

B. Use the flipper button(s) to select each message character (alphabet, numbers, and special symbols are available). In case of error, enter a "back arrow" (just before "space") to correct, followed by correct character. For a period after any letter, use letters with periods (following the special symbols). The entire character set is the following:

ABCDEFGHIJKLMNOPQRSTUVWXYZ0123456789<>?-/*'
A. B. C. D. E. F. G. H. I. J. K. L. M. N. O. P. Q. R. S. T. U. V. W. X. Y. Z. _

C. Move to the next character via the Credit button. The game program does not allow entirely blank lines to be displayed.

50 SWITCH ALARM KNOCKER

ON

This Adjustment controls the operation of the Knocker, when it is used to indicate the probable failure of one or more playfield switches. The choices are *On* (the knocker sounds to indicate a switch problem) or *Off* (No knocker actuation).

51 1 COIN BUY-IN

The operator can choose (via the Credit button) whether to allow "1 Coin Buy-in" when Game Adjustment Ad 24 is set for USA 3 (2 coins-1play, 50¢ per game player) pricing. This option enables each player, during a timed period at the end of each game, to buy another game for only one coin (25¢), after having purchased the first game for 50¢. That is, after purchasing the first game for 50¢, subsequent games cost 25¢, if purchased within the time limit.

ON

HARDER

52 SLING STRENGTH

The operator can choose (via the Credit button) to increase the action of the lower left and right kickers, if they are not providing sufficient action. The choices are *Normal* (typical, new game action) or *Harder* (for later in a game's life, when the coil action is not as strong as when the game was new).

53 - 55 Not Used In USA Games

(NOTE: Refer to the table listing EARTHSHAKER Preset Game Adjustments for German Games for settings of Ad 53 through Ad 58.)

56 INSTALL 1 COIN

The operator can use this Adjustment Item to modify the current game pricing selection to enable game play to begin when the specified number of coins are deposited. In this instance, the player now obtains 1 play when 1 coin of the proper denomination (USA: 25¢) passes through a coin chute.

57 Install 3/$1.00

The operator can use this Adjustment Item to modify the current game pricing selection to enable game play to begin after acceptance of the specified number of coins. In this instance, the player now obtains 3 plays when 25¢ coins totalling $1.00 pass through a coin chute.

GAME ADJUSTMENT PROCEDURE (Continued)

SPECIAL PRESET ADJUSTMENTS CAUTION

Adjustments 53 through 66 are Special Preset Adjustments to enable the operator to perform the setting of multiple adjustments at once. They permit the operator to: (1) either modify a game for a specific area (for example, USA coinage settings, Ad 56 through 58, or special German coinage settings, Ad 53 through 58) (2) change a group of adjustments to conform with laws of certain localities (Ad 59 through 61); and (3) to change the degree of difficulty of game play (Ad 62 through 66). A list of the preceding individual Adjustments affected accompanies each of these Special Preset Adjustments. Whenever the operator chooses to use any Special Preset Adjustment, the operator can later access any or all of the individual Adjustments affected by that Special Adjustment for subsequent changes.

A similar technique is recommended in the event of error or uncertainty concerning any Special Preset Adjustment, after the operator selects it: The operator can restore the factory setting of each individual Adjustment, then select the desired Special Preset Adjustment, and then return to any of the preceding individual adjustments to determine whether use of the Special Adjustment has had the desired effect.

The Backbox displays for each Special Preset Adjustment indicate whether the operator has selected it, by identifying the Adjustment in the Player 1 and 2 displays by name and the selection choice of NO, meaning Not Selected (this is the Factory Setting), or YES, meaning Selected, in the Player 4 display. Operator installation of the 'selected' Preset Adjustment occurs by using the Credit button to choose YES and then pressing the ADVANCE switch. The displays then show the name of the Adjustment again, with DONE to show that the installation is now in effect.

Note that, when an operator installs any of the Special Preset Adjustments, Adjustment Items using the automatic adjust feature of the game program reset to the auto adjust value listed for that Adjustment Item.

NOTE

Games in which the CPU has ROMs installed for German (Deutsch) language and play adjustments automatically have certain Adjustment Items preset. The following table shows these Preset Adjustment Items for each of the special German Coinage Adjustments.

EARTHSHAKER Preset Game Adjustments Table for German Games

Adj #	Adj Description	German 1 Ad 53	German 2 Ad 54	German 3 Ad 55	German 4 Ad 56	German 5 Ad 57	German 6 Ad 58
01	Auto Replay	On	On	On	On	On	On
02	Replay Start	3.000.000	3.000.000	3.000.000	3.000.000	3.000.000	3.000.000
03	Replay Level 2	02	02	02	02	02	02
06	Replay Award	Credit	Coil	Audit	Credit	Coil	Audit
07	Special Award	Credit	Ball	Score	Credit	Ball	Score
08	Match Feature	10 %	10 %	10 %	10 %	10 %	10 %
12	Max. Credits	30	30	30	30	30	30
14	Backup High Score 1	7.000.000	7.000.000	00	7.000.000	7.000.000	00
15	Backup High Score 2	6.500.000	6.500.000	00	6.500.000	6.500.000	00
16	Backup High Score 3	6.000.000	6.000.000	00	6.000.000	6.000.000	00
17	Backup High Score 4	5.500.000	35500.000	00	5.500.000	5.500.000	00
18	High Score 1 Credits	03	03	00	03	03	00
19	High Score 2 Credits	00	00	00	00	00	00
20	High Score 3 Credits	00	00	00	00	00	00
21	High Score 4 Credits	00	00	00	00	00	00
22	High Score Reset	1000 spiele	1000 spiele	1000 spiele	1000 spiele	1000 spiele	1000 spiele
24	Coinage Setting	6 spiele/5 DM	6 spiele/5 DM	6 spiele/5 DM	7 spiele/5 DM	7 spiele/5 DM	7 spiele/5 DM

53 through 58 ***FOR GERMAN/USA GAMES ONLY:*** **Install German 1, 2, 3, 4, 5 or 6**
The operator can use these Adjustment Items to modify the game pricing selection of Standard Setting named "German 2 or German 1" in the **Pricing Table** to permit the style of play for the particular price shown in the **EARTHSHAKER Preset Game Adjustments Table for German Games**.

58 Install 2 COINS
The operator can use this Adjustment Item to modify the current game pricing selection to enable game play to begin after acceptance of the specified number of coins. In this instance, the player now obtains 1 play when 2 coins of the proper denomination (USA: 25¢) pass through a coin chute.

59 Install Add-A-Ball
The operator can utilize this option to delete all Free Play awards and replace them with Extra Ball awards. Individual Adjustments are affected, as follows:

Ad	Name	New Setting	Ad	Name	New Setting
06	Replay Award	Ball	18	Hi Scr 1 Credits	00
07	Special Award	Ball	19	Hi Scr 2 Credits	00
08	Match Feature	Off	20	Hi Scr 3 Credits	00
11	Ex. Ball	4/BIP	21	Hi Scr 4 Credits	00

60 Install 5 Ball
The operator can change the game to 5-Ball play, including the changing of certain features to the recommended 5-Ball play difficulty level. NOTE: Ad 65 (Install HARD) settings are also set when the game is changed to '5-Ball Play'. Individual Adjustments are affected, as follows:

Ad	Name	New Setting	Ad	Name	New Setting
02	Replay Start	3,500,000	09	Balls / Game	05

61 Install Novelty
The operator can remove all Free Play and Extra Ball awards. Individual Adjustments are affected, as follows:

Ad	Name	New Setting	Ad	Name	New Setting
01	Fixed Replay	SCORES	07	Special Award	Score
02	Replay Level 1	Off	08	Match Feature	Off
03	Replay Level 2	Off	11	No Extra Ball	00
04	Replay Level 3	Off	18	Hi Scr 1 Credits	00
05	Replay Level 4	Off	19	Hi Scr 2 Credits	00
06	Replay Award	Audit	20	Hi Scr 3 Credits	00
			21	Hi Scr 4 Credits	00

62 Install Extra Easy
The operator can change the game play difficulty adjustments to a combination that is extremely easy (sometimes called "liberal"). The Game Adjustment Setting Comparison Table, which precedes these 70 individual Adjustments descriptions, lists the Adjustments and the settings that comprise the 'Extra Easy' group.

63 Install Easy
The operator can change the game play difficulty adjustments to a combination that is slightly easier than the Factory Settings. The Game Adjustment Setting Comparison Table, which precedes these 70 individual Adjustments descriptions, lists the Adjustments and the settings that comprise the 'Easy' group.

64 Install Medium
The operator can change the game play difficulty adjustments to a combination that matches the Factory Settings. The Game Adjustment Setting Comparison Table, which precedes these 70 individual Adjustments descriptions, lists the Adjustments and the settings that comprise the 'Medium' group.

65 Install Hard
The operator can change the game play difficulty adjustments to a combination that is more difficult than the Factory Settings. The Game Adjustment Setting Comparison Table, which precedes these 70 individual Adjustments descriptions, lists the Adjustments and the settings that comprise the 'Hard' group.

66 Install Extra Hard
The operator can change the game play difficulty adjustments to a combination that is much more difficult than the Factory Settings. The Game Adjustment Setting Comparison Table, which precedes these 70 individual Adjustments descriptions, lists the Adjustments and the settings that comprise the 'Extra Hard' group.

67 Auto Burn-In
The operator can choose the YES option for this Special Preset Adjustment to perform certain automatic testing of the game, as used in the factory. It does not affect the game operation, but merely provides for a cyclic testing of most of the game's mechanisms.

68 Clear Coins
The operator can request the clearing of the coinage audits (Au 01 through 04) by selecting (via the Credit button) the YES option, as shown in the player 4 display. This adjustment zeroes the counters tallying the number of coins through each slot, the Paid Credits counter, and the Credits display.

After the YES option is displayed, the operator must press the ADVANCE button. The game then displays DONE to show that the coinage audits have been reset to zero.

69 Clear Audits
The operator can request the clearing of the non-coinage audits (Au 05 through 38) by selecting (via the Credit button) the YES option, as shown in the player 4 display. This Adjustment zeroes the counters tallying the remaining Audit factors. Please note that this does NOT affect the Automatic Replay Percentaging data nor the automatic High Score Reset counter.

After the YES option is displayed, the operator must press the ADVANCE button. The game then displays DONE to show that the non-coinage audits have been reset to zero.

70 Install Factory
The operator can request the game (via the Credit button) to provide the normal Factory Settings, essentially restoring the game to its 'factory condition'. The operator must select the 'YES' option for this adjustment. This Adjustment clears all Audits, resets all Game Adjustments to the respective Factory Settings, and provides a restart of the Auto Replay (Ad 01). After selecting the YES option, the operator must press the ADVANCE button. The game then displays FACTORY SETTING.

Closing of the coin door before appearance of the FACTORY SETTING message or a problem in the Memory Protect circuit will cause the game to display ADJUST FAILURE.

A loss of battery power or improper treatment of the Game Adjustments will cause the game to attempt to restore Factory Settings. The game announces the results of this reset process with the appropriate message, FACTORY SETTING or ADJUST FAILURE.

GAME ADJUSTMENT PROCEDURE (Continued)

RESETTING THE HIGH SCORES

The challenge of exceeding the High Score (either the factory setting or a higher score by another player) is the goal of many pinball game players. To keep a pinball game challenging requires a method of resetting the High Score value for those occasions when a skilled player registers a truly excellent score. Other players note this score and may decide not to play simply because their skill is not adequate to exceed an extremely high score.

For **EARTHSHAKER**, in fact, three methods of resetting the High Score values are available. The simplest method involves allowing Game Adjustment Item Ad 22 to reset the High Score values automatically after the specified number of plays designated by the operator. The second method requires pressing the High Score Reset switch on the inside of the coin door in the Attract Mode. This action simply erases the previous high score values and replaces them with the Backup High Score values. The third method establishes new values replacing the factory setting values or previous operator setting values; it requires performing the following steps:

1. Using AUTO-UP or MANUAL-DOWN, reach item Ad 14 (and items Ad 15, 16, and 17, if desired). The High Score value of the factory setting (or previous operator-adjusted setting) appears in the Player 1 display. If this value is satisfactory, go to step 4 below.

2. If you wish to increase the High Score value from that displayed in the Player 1 display, use AUTO-UP, and press the Credit button, until the desired value shows in the Player 1 display.

3. If you wish to decrease the High Score value, use MANUAL-DOWN, and press the Credit button, until the desired value shows in the Player 1 display.

4. Using AUTO-UP, press and hold down ADVANCE, until the Player 3 display shows **Ad 70** Press ADVANCE once, to return to Game- Over Mode.

5. Press the High Score Reset switch (on coin door), and listen for the sound signifying that the score reset action is complete. Observe player score displays (Player 1, Player 2, etc.) to verify that the new High Score values are displayed.

GAME PRICING

PRICING MADE EASY. Game Adjustment Item Ad 24 allows the operator an easy method of setting the pricing functions. Pressing the Credit button allows the operator a choice of one of the 16 "Standard" Settings, with associated automatic pricing (Player 1 and 2 displays show the Country identifier, with a number for a country having more than one "Standard" Setting; player 3 and 4 displays show the games per coin(s) information). In the ***Pricing Table***, each "Standard" Setting is denoted by a Country Identifier. Automatic Pricing causes each of the other pricing items (columns 25 through 30) to change to the value shown in the table for that selected "Standard" Setting. In the table where the word "CUSTOM" appears, the owner/operator must enter the values shown (columns 25 through 30) to obtain the games per coin factor shown in the Games/Coin column of the table. To make these setting adjustments, the owner/operator must press the Credit button until the words "CUSTOM COINAGE" appear in the player score displays.

CUSTOM PRICING. Adjustment Item 24 must be set to the Custom Coinage Setting (player 1 and 2 displaying CUSTOM COINAGE) to enable the operator to enter desired custom pricing selections for Items 25 through 30, based on the ***Pricing Table.*** Item 25 is the left coin chute multiplier. Item 26 is the center coin chute multiplier. Item 27 is the right coin chute multiplier. Item 28 is the number of coin units equal to one Credit. (A Credit is usually equal to one game.)

The calculation of the ratio of Games : Price uses the ratio equation of X : VC , where:

X = Coin Chute Multiplier (Item 25, 26, or 27 in ***Pricing Table***);
V = Value of coin;
C = Coin units equivalent to one Credit (Item 28).

For example, for 25¢ chutes at the factory setting, substituting values in the Games : Price ratio calculation gives 1 : 25 x 1, or one game for 25¢.

UNITS REQUIRED FOR BONUS CREDIT. Item 29 is the number of coin units that must pass through the coin chute(s) before an additional Credit (game) is posted (displayed). At the factory setting, the number in this item is 00. (This 00 means that NO bonus credit (free game) is awarded, although purchase of more than one game at a time occurs.)

MINIMUM COIN UNITS. Item 30 determines the number of coin units that must pass through the coin chute(s) before play may begin. The Factory Setting for this item is 00. (This 00 means that the Minimum Coin Units feature (Item 30) is disabled; a 01 setting also means that this feature is still disabled, yet the Credits message display should display fractional coin units.)

GAME PRICING (Continued)

EARTHSHAKER Pricing Table

Country	Coin Chute Left	Center	Right	Games/Coin	*Ad 24 Display*	Pricing Functions 25	26	27	28	29	30
USA and Canada	25¢	-	25¢	1/25¢, 4/$1 [1,2]	U.S.A. 1	01	04	01	01	00	00
				1/50¢, 2/75¢, 3/$1 [2]	U.S.A. 2	03	12	03	04	00	00
				1/50¢, 2/$1 [2]	U.S.A. 3	01	04	01	02	00	01
				1/25¢, 3/50¢, 6/$1	CUSTOM	01	04	01	01	02	00
				1/25¢, 5/$1	CUSTOM	01	00	01	01	04	00
				1/50¢ ; Add'l game: 25¢	CUSTOM	98	00	98	99	00	00
Austria	5 Sch	10 Sch	10 Sch	1/2x5 Sch, 3/2x10 Sch [2]	AUSTRIA	01	02	02	02	04	01
	5 Sch	-	10 Sch	2/5 Sch, 5/10 Schilling	CUSTOM	02	00	05	01	00	00
	1 Sch	5 Sch	10 Sch	2/5x1 Sch, 2/5 Sch, 5/10 Sch	CUSTOM	02	10	25	05	00	00
Australia	20¢	-	$1	1/3x20¢, 2/$1 [2]	AUSTRAL.	01	00	06	03	00	01
United Kingdom	10 P	50 P	1£	1/2x10 P, 3/50 P, 7/1£ [2]	U.K.	03	15	30	05	30	00
	10 P	50 P	20 P	1/10 P, 5/50 P, 2/20 Pence	CUSTOM	01	05	02	01	00	00
Switzerland	1 F	2 F	5 F	1/1 F, 3/2 F, 7/5 Franc [2]	SWISS	01	03	07	01	00	00
	1 F	-	2 F	1/1 F, 3/2 F	CUSTOM	03	00	06	02	00	00
Belgium	20 F	20 F	20 F	3/20 Franc [2]	BELGIUM	03	03	03	01	00	00
	5 F	-	20 F	1/2x5 F, 2/20 Franc	CUSTOM	01	01	04	02	00	01
	5 F	20 F	20 F	1/2x5 F, 2/20 F, 2/20 F	CUSTOM	01	04	04	02	00	01
	5 F	5 F	20 F	1/2X5 F, 1/2X5 F, 2/20 F	CUSTOM	01	01	04	02	00	01
West Germany	1 DM	2 DM	5 DM	1/1 DM, 2/2 DM, 7/5 DMark [2,3]	GERMAN1	06	12	30	05	30	00
				1/1 DM, 2/2 DM, 6/5 DM [1,2]	GERMAN2	06	12	30	05	00	00
				1/1 DM, 3/2 DM, 9/5 DM	CUSTOM	09	18	45	05	00	00
				1/2x1 DM, 1/2 DM, 3/5 DM	CUSTOM	03	06	15	05	00	00
				2/1 DM, 5/2 DM, 14/5 DM	CUSTOM	13	26	65	05	65	00
Netherlands	1 HFl	2.5 HFl	2.5 HFl	1/1 HFl, 3/2.5 Holland Florin [2]	NETHERL.	06	15	15	05	00	00
	25¢	-	1 G	1/25¢, 5/1 Guilder	CUSTOM	01	00	05	01	00	00
Sweden	5 Kr	5 Kr	5 Kr	1/5 Krona [2]	SWEDEN	01	01	01	01	00	00
	1 Kr	-	1 Kr	1/2x1 Krona	CUSTOM	01	04	01	02	00	01
France	1 F	5 F	10 F	1/3x1 F, 2/5 F, 5/10 Franc [1,2]	FRANCE	02	10	20	05	20	00
Italy	500 L	500L	500 L	1/500 Lire [2]	ITALY	01	01	01	01	00	00
Spain	25 P	-	100 P	1/25 P, 5/100 Peseta [2]	SPAIN	01	00	05	01	00	00
Japan	-	100 ¥	-	2/100 ¥ [2]	JAPAN	01	04	01	02	00	01
	100 ¥	-	100 ¥	2/100 Yen	CUSTOM	02	00	02	01	00	00
Antilles, Netherl.	25¢	-	1 G	1/25¢, 4/1 Guilder [2]	ANTILLES	01	01	04	01	00	00
Chile	Token	-	Token	1/1 Token [2]	CHILE	01	04	01	01	00	00
Denmark	1 Kr	5 Kr	10 Kr	1/2x1 Kr, 3/5 Kr, 7/10 Krone [2]	DENMARK	01	06	14	02	00	01
Finland	1 Mka	-	5 Mka	1/2x1 Mka, 3/5 Markka [2]	FINLAND	01	00	06	02	00	01
New Zealand	20¢	-	20¢	1/2x20¢ [2]	N. Z.	01	04	01	02	00	01
Norway	1 Kr	-	1 Kr	1/2x1 Kr, 3/5x1 Krone [2]	NORWAY	01	00	01	02	05	00
Argentina	10¢	10¢	10¢	1/1 Token [2]	ARG.	01	01	01	01	00	00

Notes: 1. Factory Default. 2. Standard Setting - Change by pressing Credit button. 3. Other functions are also affected; see the explanations for Adjustment Items 53 through 58.

TEST/DIAGNOSTIC PROCEDURES

WILLIAMS ELECTRONICS GAMES provides a series of diagnostic tests to aid the operator in determining game condition (that is, whether the game's features and highlights are operating satisfactorily). These tests activate virtually all the electronic and electromechanical devices comprising the game, so that the operator can readily locate a malfunctioning device or simply verify that all devices are working properly. In order, these tests deal with the music, the displays, the game sounds, the lamps, the solenoids, and the switches.

In addition to the diagnostic testing, a feature called the Auto Burn-in Mode is available. Activating this mode enables the operator to observe the game while all of the diagnostic tests, *except the switch test,* occur. This can be very helpful in locating 'intermittent' problems.

Activating either the entire test series or one of the individual tests requires use of the Game Adjustment/ Diagnostic switches. Open the coin door for access to these switches. To proceed to the Diagnostic Tests, the operator must simply switch the game On, set the AUTO-UP/MANUAL-DOWN switch to MANUAL-DOWN, and press the ADVANCE button.

CAUTION

The System-11B game program greatly aids the operator and service personnel: At the beginning of the Test/Diagnostic Procedures (and also at game Turn-On), the player score displays now signal, with a message ("Press ADVANCE for Report") that at least one switch has *NOT* been actuated during ball play for a lengthy period of time (90 balls, or ≈30 games). Moreover, the Problem Reporting activity at the beginning of the Test/ Diagnostic Procedures, the display of problem switches now includes *ALL* switches exhibiting problems. Refer to the text on Switch Tests for additional information. To proceed with the Test/Diagnostic Procedures, use AUTO-UP, and press ADVANCE.

MUSIC TEST.

1. In the Music Test, observe that the player 1 and 2 displays show the message, MUSIC TEST. Switching to AUTO-UP, observe that the message now reads MUSIC OFF, and that the player 3 score display shows 00 00. Press the Credit button to select the desired music selection: 01 - 'Main Theme' through 08 - 'Hi. Score Theme' (the selections repeat). Adjust the volume control for proper sound level for the game location.

2. Use the AUTO-UP position.

DISPLAY TEST.

1. To initiate the Display Test, press ADVANCE. Observe that player 1 and 2 displays briefly show the message, DISPLAY TEST, and that the player 3 score display shows 01 (the Display Test identifier).

2. Use AUTO-UP. Observe that all displays begin a display cycle of all 0s through all 9s, one digit at a time. Verify that the proper comma segments light during display of the odd-numbered digits. Next, a special "all segments" character 'walks' from left to right across each player score display.

3. To halt the display cycle, use MANUAL-DOWN. Then, press ADVANCE to step through the sequential digit display, digit by digit, and the subsequent "all segments" characters display test. Use AUTO-UP to resume cycling, and to proceed to the next test.

SOUND TEST.

1. (From Display Test) To initiate the Sound Test, press ADVANCE. Observe that the player 1 and 2 displays show the message, SOUND TEST, and that the player 3 display shows 02 (the Sound Test identifier). The player 3 display shows a series of test steps from 00 through 07. Verify that a different sound is heard each time the number in the display changes.

2. To repeatedly pulse a single sound, use MANUAL-DOWN. Verify that one particular sound repeats. Press ADVANCE to step to the next sound, which repeats until ADVANCE is pressed again. Use AUTO-UP to resume cycling the sounds, and to proceed to the next test.

TEST/DIAGNOSTIC PROCEDURES (Continued)

LAMP TESTS.

1. All Lamps.

(From Sound Test) To initiate the first Lamps Test, press ADVANCE. Observe that the Player 1 and 2 displays show the message, ALL LAMPS, and that the Player 3 display shows 03 (All LampsTest identifier) and that all feature lamps (playfield and backbox) blink on and off. (Note, however, that the General Illumination lamps remain lighted steadily.) To locate the wiring associated with a particular feature lamp, refer to the **Lamp-Matrix Table.** CPU Board connections at jacks 1J6 (columns) and 1J7 (rows) are also listed in the table.

2. Single Lamps.

From the All Lamps test, using AUTO-UP, press ADVANCE to initiate the Single Lamps Test. The Player 1 and 2 displays initially show the message, SINGLE LAMPS, and the Player 3 display shows 04. Then, the Player 3 display shows 04 01, and the Player 1 and 2 displays change to show "BONUS 1K", the name of the lamp currently blinking. Press the Credit button to proceed through an ascending series of designator numbers (01 through 64), with the Player 1 and 2 displays showing the individual lamp's name. (To proceed through a descending series of lamp identifiers, use MANUAL-DOWN.) Press and hold the Credit button to proceed rapidly to the desired lamp.

EARTHSHAKER Lamp-Matrix Table

COLUMN / ROW	1 Q66 YEL-BRN 1J7-1	2 Q64 YEL-RED 1J7-2	3 Q62 YEL-ORN 1J7-3	4 Q60 YEL-BLK 1J7-4	5 Q58 YEL-GRN 1J7-6	6 Q56 YEL-BLU 1J7-7	7 Q54 YEL-VIO 1J7-8	8 Q52 YEL-GRY 1J7-9
Q80 1 RED-BRN 1J6-1	Captive Ball 1 (low) 1	BONUS 2X 9	Building 7 17	Building 3 25	Miles 1 33	Top Jet Bumper 41	Left Road Sign 49	Right Road Sign 57
Q81 2 RED-BLK 1J6-2	Captive Ball 2 2	BONUS 3X 10	Building 8 18	Right Standup (2) (High) 26	Miles 2 34	Left Jet Bumper 42	Left Standup (1) 50	Jackpot (SP) 1 58
Q82 3 RED-ORN 1J6-3	Captive Ball 3 3	BONUS 4X 11	Building 9 19	Right Standup (3) (Low) 27	Miles 3 35	Right Jet Bumper 43	Eject Lock 51	Jackpot (SP) 2 59
Q83 4 RED-YEL 1J6-5	Captive Ball 4 4	BONUS 5X 12	Building 4 20	Right Standup 50K 28	Miles 4 36	Right Ramp Jackpot 44	Eject (5) Top 52	Jackpot (SP) 3 60
Q84 5 RED-GRN 1J6-6	Captive Ball 5 (high) 5	BONUS 6X/Lites Ex. Ball 13	Building 5 21	R Inside (7) Return Lane 29	Miles 5 37	Right Ramp Lock 45	Center (4) Standup 53	Jackpot (SP) 4 61
Q85 6 RED-BLU 1J6-7	Captive Ball Arrow (9) 6	BONUS 6X/Lites Special 14	Building 6 22	R Outside Return Lane 30	Miles 10 38	Right Ramp 3 Miles 46	Drop Hole Extra Ball 54	Jackpot (SP) 5 62
Q86 7 RED-VIO 1J6-8	Spinner 7	L Return Lane 15	Building 1 23	Right Outlane 31	Miles 20 39	Center Ramp 100K 47	Drop Hole Lock 55	Jackpot (SP) 6 63
Q87 8 RED-GRY 1J6-9	Jet Bumper Center 8	Left (8) Outlane 16	Building 2 24	SHOOT AGAIN 32	Miles 30 40	Center Ramp 2 Miles 48	Under (6) Fault Loop 56	Jackpot (SP) 7 64

TL = Top Left TR = Top Right BL = Bottom Left BR = Bottom Right (7) = "Zone" SP = Speaker Panel ** = 2 Lamps

TEST/DIAGNOSTIC PROCEDURES (Continued)

SOLENOID TEST.

1. (From Lamp Test) Using AUTO-UP, press ADVANCE. Observe that the Player 1 and 2 displays show the message, COIL TEST, the Player 3 display shows 05 (Solenoid Test identifier). Next, the Player 3 display shows a series of test steps from 01 through 22, while the Player 1 and 2 displays show the solenoid/circuit name. During each of these steps, pulsing of the respective solenoid/circuit occurs. The test cycles repeatedly, unless halted via the MANUAL-DOWN switch. Refer to the **Solenoid Table** for solenoid numbers and wiring information. CPU Board connections at 1P11, 1P12, and 1P19 are also listed in the table.

   To continuously pulse a single solenoid/circuit, use MANUAL-DOWN. Press ADVANCE to sequence through the switched, controlled, and special solenoids. Use AUTO-UP to resume test cycling, and to proceed to the next test.

EARTHSHAKER Solenoid Table

Sol. No.	Function	Solenoid Type	Wire Color [1]	Connections: CPU Bd	Connections: Playfield/ Cabinet	Driver Trnstr	Solenoid Part Number / Flashlamp Type (d= Display Bd; p=Playfield)
01A [3]	Outhole Kicker	Switched	{Vio-Brn	1P11-1	5J1-9: 5J4-9 (A)	Q33	AE-23-800
01C [3]	Captive BallFlashers	Switched	Blk-Brn}	(Gry-Brn)	5J5-9 (C)	Q33	#89 flashlamp 1p
02A [3]	Ball Release (Shtr Lane Feeder)	Switched	{Vio-Red	1P11-3	5J1-7: 5J4-8 (A)	Q25	AE-23-800
02C [3]	Cntr Ramp 1 & Bldg Flashers	Switched	Blk-Red}	(Gry-Red)	5J5-8 (C)	Q25	#906/#89 flashlamps 2p
03A [3]	3-Bank Dr Tgt Reset	Switched	{Vio-Orn	1P11-4	5J1-6: 5J4-7 (A)	Q32	AE-26-1200
03C [3]	Cntr Ramp 2 & Spinner Flashers	Switched	Blk-Orn}	(Gry-Orn)	5J5-7(C)	Q32	#906/#89 flashlamps 2p
04A [3]	California Fault	Switched	{Vio- Yel	1P11-5	5J1-5: 5J4-6 (A)	Q24	AE-23-800
04C [3]	Cntr Ramp 3 Flasher	Switched	Blk-Yel}	(Gry-Yel)	5J5-5 (C)	Q24	#906 flashlamp 1p
05A [3]	Eject Hole	Switched	{Vio-Grn	1P11-6	5J1-4: 5J4-5 (A)	Q31	AE-26-1500
05C [3]	Cntr Ramp 4 Flasher	Switched	Blk-Grn}	(Gry-Grn)	5J5-4 (C)	Q31	#906 flashlamp 1p
06A [3]	Bottom Ball Popper	Switched	{Vio-Blu	1P11-7	5J1-3: 5J4-4 (A)	Q23	AE-23-800
06C [3]	Right Ramp 1 Flasher	Switched	Blk-Blu}	(Gry-Blu)	5J5-3 (C)	Q23	#906 flashlamp 1p
07A [3]	Knocker	Switched	{Vio-Blk	1P11-8	5J1-2: 5J4-2 (A)	Q30	AE-23-800
07C [3]	Right Ramp 2 Flasher	Switched	Blk-Vio}	(Gry-Vio)	5J5-2 (C)	Q30	#906 flashlamp 1p
08A [3]	Not Used	Switched	{Vio-Gry	1P11-9	5J1-1: 5J4-1 (A)	Q22	
08C [3]	Right Ramp 3 Flashers	Switched	Blk-Gry}	(Gry-Blk)	5J5-1 (C)	Q22	#906/#89 flashlamps 2p
09	Not Used	Controlled	Brn-Blk	1P12-1	5J2-9: 5J6-9: 2J4-3	Q17	
10	Upper Playfield Gnl Illum Relay	Controlled	Brn-Red	1P12-2	5J2-8: 5J6-8: 2J4-5	Q9	5580-12145-01 [4a]
11	Insert Board Gnl Illum Relay	Controlled	Brn-Orn	1P12-4	5J2-6: 5J6-7: 2J4-6	Q16	5580-09555-01 [4b]
12	A/C Select Relay	Controlled	Brn-Yel	1P12-5	5J2-5	Q8	5580-09555-01 [5]
13	Top Ball Popper	Controlled	Brn-Grn	1P12-6	5J2-4: 5J6-5	Q15	AE-23-800
14	Jackpot Flasher	Controlled	Brn-Blu	1P12-7	5J2-4: 5J6-3	Q7	#906 flashlamps [4a] 2p
15	Low Playfield Gnl Illum Relay	Controlled	Brn-Vio	1P12-8	5J2-2: 5J6-2	Q14	5580-12145-01 [4a]
16	On Ramp & J Bumper Flashers	Controlled	Brn-Gry	1P12-9	5J2-1: 5J6-1	Q6	#906/#89 flashlamps 2p
17	Left Jet Bumper	Special #1	Blu-Brn	1P19-7	5J3-7: 5J7-7	Q75	AE-23-800
18	Left Kicker ("sling")	Special #2	Blu-Red	1P19-4	5J3-6: 5J7-6	Q71	AE-26-1500
19	Right Jet Bumper	Special #3	Blu-Orn	1P19-3	5J3-3: 5J7-3	Q73	AE-23-800
20	Right Kicker ("sling")	Special #4	Blu-Yel	1P19-6	5J3-4: 5J7-5	Q69	AE-26-1500
21	Top Jet Bumper	Special #5	Blu-Grn	1P19-8	5J3-2:5J7-2	Q77	AE-23-800
22	Quake Motor	Special #6	Blu-Blk	1P19-9	5J3-1: 5J7-1	Q79	14-7951
-	Right Flipper	-	Orn-Vio	1P19-1	2J5-5: 2J10-7	-	
	Lower Right Flipper		[Blu-Vio] [2]		[2J10-1: 2J8-15]		FL11630/50VDC
-	Left Flipper	-	Orn-Gry	1P19-2	2J5-4: 2J10-8	-	
	Lower Left Flipper		[Blu-Gry] [2]		[2J10-2:2J8-4]		FL11630/50VDC
	Upper Left Flipper		[Blk-Blu]		[2J10-4:2J8-12]		FL11722/50VDC

Notes: 1. Wire colors, except flipper Orn-Vio and Orn-Gry, are ground connections (to coil terminal with unbanded end of diode). Flipper Orn-Vio and Orn-Gry wires connect from CPU Board to flipper switch. 2. Flipper connections shown in braces are from flipper switch to flipper coil. 3. "A" circuits are pulsed, when Sol. 12 is de-energized; "C" circuits are pulsed, with Sol. 12 energized. Wire colors in brackets are those from respective A and C terminals corresponding to the J1-terminal connection listed for the Aux Power Driver Bd, which controls the device pulsing by Sol. 12. 4. Relay is mounted on Relay Bd, (4a) p/n C-11998-1; (4b) C-11902-1. 5. Relay is mounted on Aux Power Driver Bd, D-12247 in the backbox.

"On" State Logic - Special Solenoid

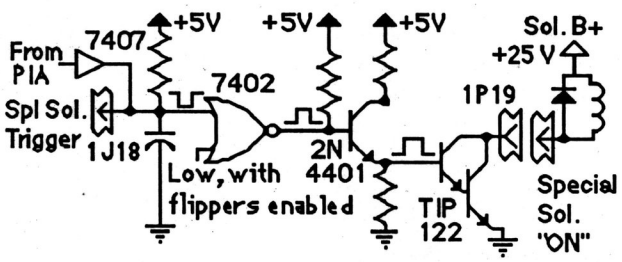

"Off" State - Special Solenoid:
The Special Switch Trigger Input goes low. Meanwhile, the PIA line remains high. The remaining signals reverse their states.

"On" State Logic - Controlled Solenoid

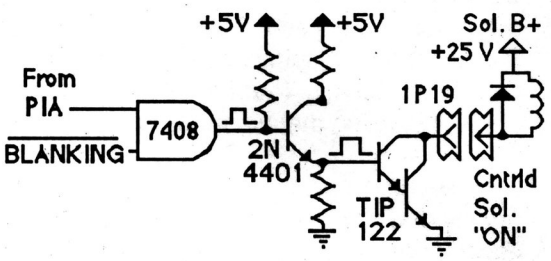

"Off" State - Controlled Solenoid:
The Enable Input (from the PIA) goes low. Meanthe BLANKING signal remains high. The rest of the signals reverse their states.

NOTE

As directed by the game program, the Solenoid A/C Select Relay (solenoid 12) switches the solenoid B+ power between two power busses to permit actuating two groups of solenoids at the proper times. In its de-energized state, the Relay connects the 'circuit A power' to 16 "controlled" and "switched" solenoids (identified in the table with no suffix letter or the letter A, after the solenoid number). Individual solenoid operation then depends on the game program enabling the ground path for solenoid actuation via the driver transistor associated with each solenoid circuit. For example, the game program can actuate the Outhole Kicker solenoid (sol. 01A), via the driver transistor Q33, when the ball drains into the outhole, operating the outhole switch.

When the game program determines that the Solenoid A/C Select Relay (sol. 12) must be energized, the relay connects 'circuit C power' to eight group C solenoids (01C through 08C). Now, driver transistor Q33 can actuate the Captive Ball Flasher circuit (sol. 01C). Using this "multiplexing" technique, the same driver transistor can control actuation of two separate solenoid circuits.

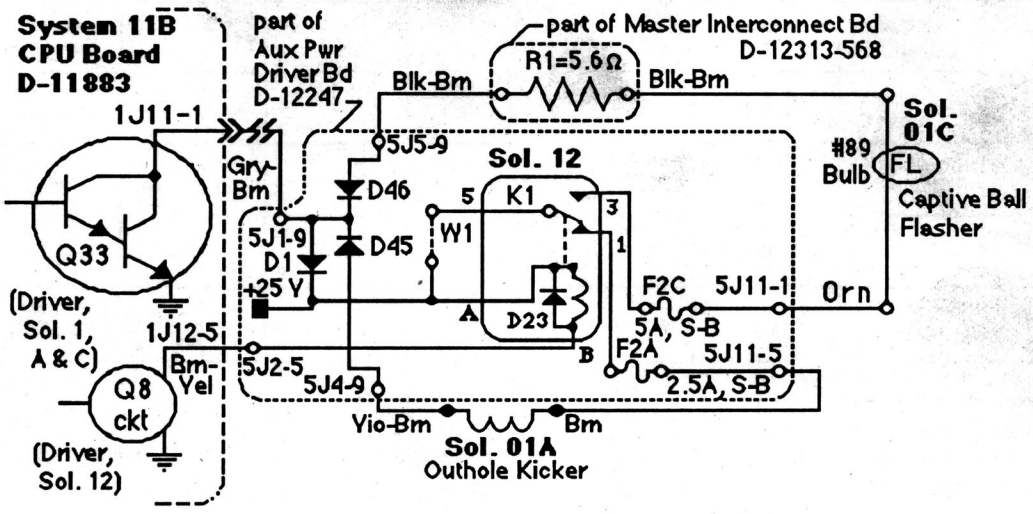

Figure 4. Typical Solenoid A/C Select Relay Circuit, showing the function of Solenoid 12, the Solenoid A/C Select Relay.

TEST/DIAGNOSTIC PROCEDURES (Continued)

SWITCH TESTS.

1. Switch Levels.

(From Solenoid Test) To initiate the Switch Levels Test, press ADVANCE. Observe that the Player 1 and 2 displays show the message, SWITCH LEVELS, and the Player 3 display shows 06 (Switch Levels Test identifier). Normally, the right portion of the Player 3 display remains blank, indicating that no switch is actuated.

If, however, a switch *is* actuated (possibly stuck closed), the Player 3 display shows that switch's number, while the Player 1 and 2 displays indicate the switch's name. A sound also accompanies the displays. (This is another facet of the **EARTHSHAKER** System-11B's switch testing capability.) If more than one switch is closed, a series of displays show each actuated switch's name and number.

(In addition, either of these problems could result in the reporting of a switch problem (or problems) at game Turn-On or at the beginning of Diagnostic Tests.)

As soon as the operator opens a closed switch, its name and number are eliminated from the Switch Levels display series. For **EARTHSHAKER**, switch numbers can range from 01 through 64. Refer to the **Switch-Matrix Table** for switch numbers and wiring information. CPU Board connections at jacks 1J8 (columns) and 1J10 (rows) are also listed in the table.

EARTHSHAKER Switch-Matrix Table

COLUMN / ROW	1 Q45 GRN-BRN 1J8-1	2 Q49 GRN-RED 1J8-2	3 Q44 GRN-ORN 1J8-3	4 Q48 GRN-YEL 1J8-4	5 Q43 GRN-BLK 1J8-5	6 Q47 GRN-BLU 1J8-7	7 Q42 GRN-VIO 1J8-8	8 Q46 GRN-GRY 1J8-9
1 WHT-BRN 1J10-9	Plumb Bob Tilt 1	Playfield Tilt 9	Left Outlane 17	25	On Ramp 50K 33	Spinner 41	49	Flipper Right 57
2 WHT-RED 1J10-8	C Side Power A/C Relay 2	Outhole 10	Left Return Lane (8) 18	26	On Ramp 25K 34	Fault Open 42	Ball Shooter 50	Flipper Left 58
3 WHT-ORN 1J10-7	Credit Button 3	Ball Trough #1 (R) 11	Left Standup (1) 19	3-Bank DT (left) 27	On Ramp 100K 35	Right Ramp Entry 43	51	59
4 WHT-YEL 1J10-6	Left Coin Chute 4	Ball Trough #2 (Mid) 12	Eject Hole (5) 20	3-Bank DT (mid) 28	On Ramp Bypass 36	Center Ramp Entry 44	Left Jet Bumper 52	60
5 WHT-GRN 1J10-5	Center Coin Chute 5	Ball Trough #3 (L) 13	Right Standup (high) (2) 21	3-Bank DT (right) 29	Ball Popper (top) 37	Center Ramp Middle 45	Right Jet Bumper 53	61
6 WHT-BLU 1J10-3	Right Coin Chute 6	Right Inside Return (7) Lane 14	Right Standup (low) (3) 22	Center Standup (4) 30	Under Playfield Drop Hole 1 38	Center Ramp End 46	Top Jet Bumper 54	62
7 WHT-VIO 1J10-2	Slam Tilt 7	Right Outside Return Lane 15	Captive Ball (9) 23	Right Loop (6) 31	Under Playfield Drop Hole 2 39	47	BL Kicker ("sling") 55	63
8 WHT-GRY 1J10-1	High Score Reset 8	Right Outlane 16	Right Standup (50K) 24	Left Loop (6) 32	Ball Popper (bottom) 40	48	BR Kicker ("sling") 56	64

TL = Top Left TR = Top Right BL = Bottom Left BR = Bottom Right (7) = "Zone"

Row Problems. If a display of two (or more) switch numbers of a row occurs, although only one switch is closed, check for a short circuit between the column wires.

Multiple Switch Number Indications. Check the associated column wire for a short circuit to ground.

Column Problems. If display of two (or more) switch numbers in a column occurs (while only one switch is actuated), check for a short circuit between the row wires.

Use AUTO-UP to proceed to the next test.

SWITCH TESTS (Continued).

2. **Switch Edges.**
From the Switch Levels Test, press ADVANCE. Observe that the Player 1 and 2 displays show the message, SWITCH EDGES; the Player 3 display shows 07 (Switch Edges Test identifier). The right portion of the Player 3 display is blank, indicating that no switch is actuated.

This test permits the operator to test whether actuating a switch provides the proper signal to the System-11B switch testing program. When actuating a switch, the operator should see the switch's name and number (in the Player 1, 2, and 3 displays, respectively). If no indication appears at the time the switch is actuated, the operator then knows that there is a malfunction associated with that switch.

Using this technique, the operator can test each switch appearing in the **EARTHSHAKER** switch problem reporting displays (either at game Turn-On or at the beginning of the Diagnostic Tests) to determine whether the switch can be actuated. If the switch's name and number are displayed while the operator checks its operation, the operator then knows that the reported problem with that switch is NOT currently caused by a switch malfunction. The operator can then seek other causes for the reported problem, being almost certain now that the switch did not fail. *This test is also useful when the operator is adjusting the sensitivity of a particular switch's actuation mechanism.*

Among the possibilities is the fact that the players have not actuated that switch because of some other problem; the operator should try to analyze what could cause the switch to be missed during game play, and remedy that problem cause. With these new tests, switch problems are, therefore, more easily isolated.

3. *Playfield or CPU Board?* To determine whether a switch problem is in the playfield or the CPU Board, remove connectors 1P8 and 1P10 from the CPU Board. Begin the Switch Test. Use a jumper wire to simulate switch actuation. For example, placing a jumper between 1J10-9 and 1J8-2 should (based on the **Switch-Matrix Table**) should produce an indication of switch 09 being actuated.

C-SIDE TEST

From the Wheel Test, press ADVANCE. Observe that the Player 1 and 2 displays show the message, C-SIDE TEST, and that the Player 3 displays shows 08 (C-Side Test identifier).

The Player 1 and 2 displays then change to show the 'side' of the circuit being tested, alternating between "SELECTED A-SIDE" and "SELECTED C-SIDE", while the Player 3 display shows 09 and the side being tested. The message "Err" appears whenever the side being tested is not receiving power via the relay and fuse of the Aux Power Driver Board and the resistor and opto transistor of the Backbox Interconnect Board. The "Err" message of this test indicates a component failure (most likely, a blown fuse) in the pulsing circuitry for the coils and flashers.

ENDING THE DIAGNOSTIC TESTS.

To end the Diagnostic Tests, reach the C-Side Test (09 in the Player 3 display), use AUTO-UP and press ADVANCE. The backbox displays should show the **EARTHSHAKER** game's Identification Information. Use MANUAL-DOWN, and press ADVANCE to reach Adjustment Item 70 (INSTALL FACTORY). Use AUTO-UP, and press ADVANCE to go to the Attract Mode.

TEST/DIAGNOSTIC PROCEDURES (Continued)

AUTO BURN-IN MODE.

The Auto Burn-in Mode permits the operator to check intermittent (or nonrecurring) problems associated with most portions of the game's circuitry. Repeatedly cycling through a group of tests can sometimes bring a problem, which occurs only randomly or occasionally, to exhibit itself more frequently, thereby aiding in the isolation of the problem. To activate the Auto Burn-in Mode:

1. While in the Game Adjustments, reach Ad 67 and change the Factory Setting of NO to YES, via the Credit button. Set the AUTO-UP/MANUAL-DOWN switch to AUTO-UP.

2. Press ADVANCE to start the Auto Burn-in Mode. This mode repeatedly sequences through the Music Test, the Display Test, the Sound Test, the All Lamps portion of the Lamp Test, and the Solenoid Test.

3. To halt the Auto Burn-in Mode, switch the game Off and then On. **EARTHSHAKER** now starts in the Attract Mode. (If a switch problem is now reported by the displays, perform the Switch Tests again to determine the nature of the problem; then, perform necessary repairs.)

SYSTEM-11B MEMORY CHIP TEST.

A new feature is now included in the Memory Chip Test for System 11B. During power-up, the CPU performs a self-testing routine. When all tests are satisfactory, the game proceeds to the Attract Mode, allowing players to use the game. Whenever a portion of the testing does not produce satisfactory results, the game displays a message, before proceeding to the next portion of the testing. ONLY after all tests are satisfactory does the game allow play to begin.

In addition to the displayed message, when a test fails, LED2 ('DIAGNOSTIC') mounted on the CPU Board can be observed to determine the probable cause of the problem. This LED blinks, or flashes, a certain number of times to identify the probable cause, as described in the **CPU LED Indicator Codes Table**. The operator can also start the self-testing routine by pressing the CPU Diagnostic Switch (SW 2) on the edge of the CPU Board.

CPU LED Indicator Codes Table

Diagnostic LED		
Blinks/ Flashes	**Display Message**	**Explanation**
1	U25 RAM FAILURE	U25 RAM could not be used properly (NO other tests are performed; the game is locked here, until the game is turned off).
2	MEM. PROT. FAILURE	This message means that (A) the Coin Door may be shut; (B) the Memory Protect Switch may be stuck in the ON position; (C) the memory protect logic is protecting the memory; or (D) a U25 RAM failure is occurring. (See Note 1)
3	U51 PIA FAILURE	U51 has a malfunction. (See Note 2)
4	U38 PIA FAILURE	U38 has a malfunction. (See Note 2)
5	U41 PIA FAILURE	U41 has a malfunction. (See Note 2)
6	U42 PIA FAILURE	U42 has a malfunction. (See Note 2)
7	U54 PIA FAILURE	U54 has a malfunction. (See Note 2)
8	U10 PIA FAILURE	U10 has a malfunction. (See Note 2)
9	IRQ FAILURE	IRQ has a malfunction. It may be missing or too fast or too slow.
10	U27 ROM FAILURE	U27's internal checksums do not match. It may be a ROM failure, or its associated connections and connectingdevices are causing it to appear to have a problem. (The following U26 test is skipped.)
11	U26 ROM FAILURE	U26's internal checksums do not match.

Notes: 1. This test assumes that the Coin Door is OPEN; it is initiated ONLY by pressing the CPU Diagnostic Switch (SW2).

2. Alternatively, its associated connections or connecting devices are causing the IC to appear to have problems.

SYSTEM-11B SOUND CIRCUITRY TESTS.

Tests of the System-11B Sound circuitry, including the Audio Board, are possible only after successful completion of the System-11B Memory Chip Test.

1. **Audio Board Test.** A brief check of the Audio Board (D-11581) circuitry occurs at game Turn-on; the game reports the test results by brief sounds, as follows: No sound = Audio Board is not operating, or a failure is affecting the sound circuitry (broken cable; dead amplifier; etc.); 1 sound = system OK; 2 sounds = RAM problem; 3 sounds = U4 problem; 4 sounds = U19 problem.

2. **General System-11B Sound Test.** Press the Sound Diagnostic Switch (SW 1) on left edge of the CPU Board. Listen for the two test sounds, showing that both the CVSD (Continuously Variable Slope Delta) Modulator, which provides the voices for **EARTHSHAKER**, and the DAC (Digital-to-Analog Converter) sound circuits are functioning properly.

   If no sound is heard, refer to the text entitled "NO SOUND ...". If one "ring" is heard, this indicates a malfunction of the U23 RAM Chip. If either two or four "rings" is heard, this indicates a problem associated with the U21 ROM Chip. If either three or five "rings" is heard, this indicates a problem with the U22 ROM Chip.

NO SOUND DURING THIS TEST (but sound can be heard during the Diagnostic Tests).

Check the sound-select inputs (pins 2 through 9 of U9) to see if they pulse during Sound Test 01. Also, check the -12 V supply voltage on the CPU Board. If this voltage is low (or AC ripple seems too high), perform the following checks:

1. The gray and gray-green transformer secondary wires for 19.4 VAC.
2. The CPU Board filter capacitor C26 for -12 VDC.
3. The filter capacitor C26 for excessive AC ripple (over 0.75VAC).

If the previous checks did not isolate the problem, turn the Volume Control for maximum output. Momentarily touch a powered-up AC soldering pencil on the center tap of the Volume Control.

CAUTION

DO NOT use a soldering iron over 40 watts. Note also that cordless soldering irons will NOT work for this test.

Hearing a low hum or a 'click' indicates that the power amplifier (U1, TDA2002), the Volume Control, and the speaker are operating satisfactorily, as is the sound circuit cabling. Not hearing a sound requires repeating the test with the Volume Control turned part way down, to determine whether the Volume Control is faulty. Also, check the cable connectors for proper mating, and that no broken wires affect this circuit .

Fuse Locations Diagram & Listing

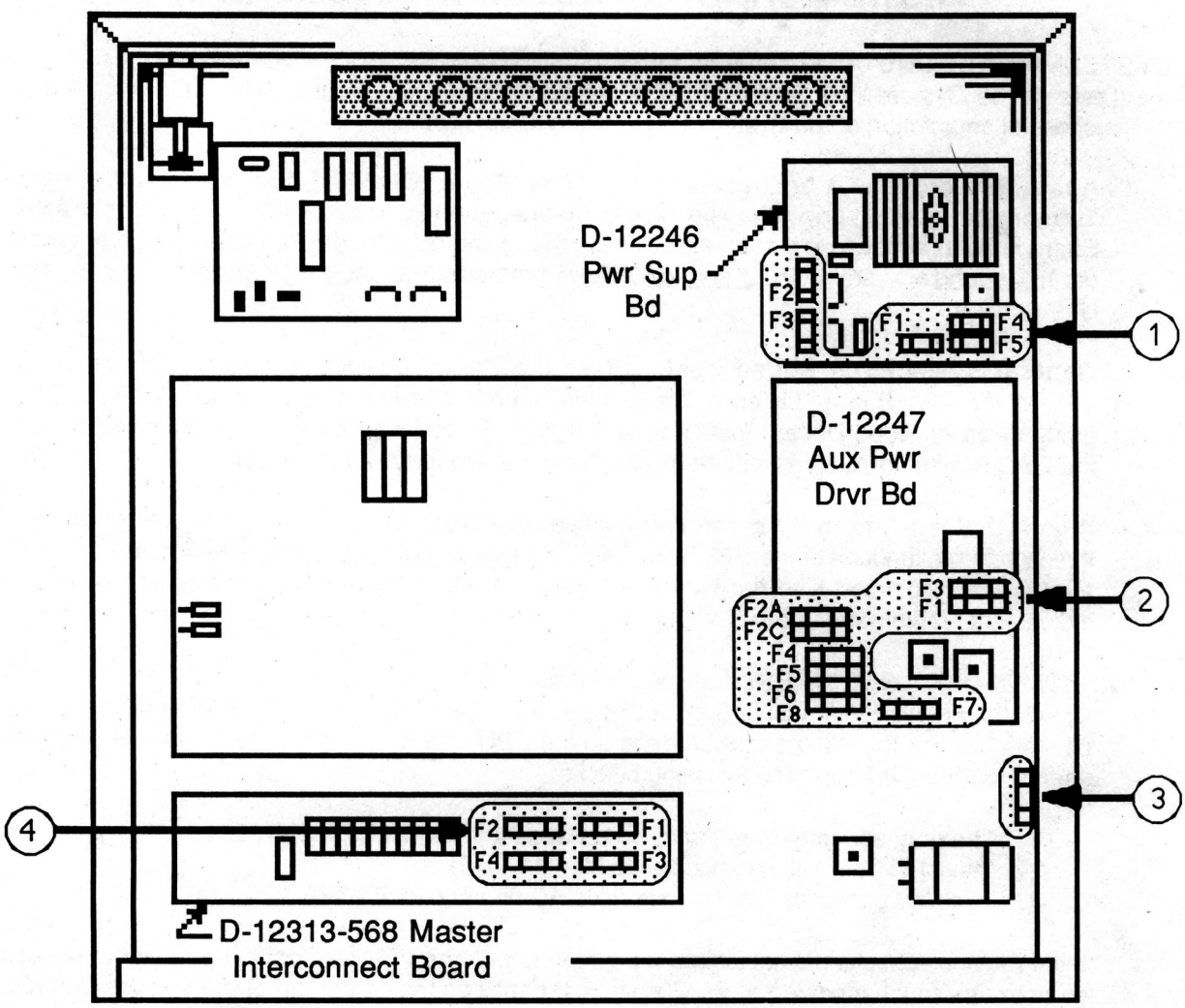

Note: Under the playfield to the left of the Top Jet Bumper is a 2.5A., 250V, S-B fuse, 5731-09128-00, in the Red-White line powering the Jet Bumpers.

Fuse Listing

Item	Part Number	Description	Circuit/Location
1	5731-12328-00	Fuse, 3/8A., S-B, 250V	F1; D-12246 Power Supply Board
1	5731-12327-00	Fuse, 1/8A., S-B, 250V	F2, F3; D-12246 Power Supply Board
1	5731-09432-00	Fuse, 7A S-B, 250v	F4, F5; D-12246 Power Supply Board
2	5731-09128-00	Fuse, 2-1/2A., S-B, 250v	F1, F2A, F4; D-12247 Aux Pwr Driver Board
2	5731-09651-00	Fuse, 5A., S-B, 250v	F2C, F3; D-12247 Aux Pwr Driver Board
2	5731-08665-00	Fuse, 2A., S-B, 250v	F5, F6; D-12247 Aux Pwr Driver Board
2	5731-06314-00	Fuse, 4A., S-B, 250v	F7; D-12247 Aux Pwr Driver Board
2	5731-09432-00	Fuse, 7A., S-B, 250v	F8; D-12247 Aux Pwr Driver Board
3	5730-09071-00	Fuse, 8A., S-B, 32v	+18 Vdc Lamp Ckt/ Lwr Rt Backbox fuseholder (1)
4	5731-09651-00	Fuse, 5A., S-B, 250v	F1 - F4: Gen. Illumination/B'box Interconnect Board
-	5730-09252-00	Fuse, 8A.,Slow-Blow (S-B), 125v	Input ("high voltage") Power Line/Cabinet Box*

* One 4A., S-B, 250v fuse (5731-06314-00) is provided for an overseas (220v) game installation.

Figure 4 shows the two main lubrication points of the Shooter Lane Feeder. The shaded arrows show the directions in which the Shooter Lane Feeder and other parts of its related assemblies can be adjusted for proper operation. Note that the mechanisms of the Eject Hole Arm Assembly is quite similar to the Shooter Lane Feeder; it has the same lubrication requirements and adjustment capabilities as the Shooter Lane Feeder.

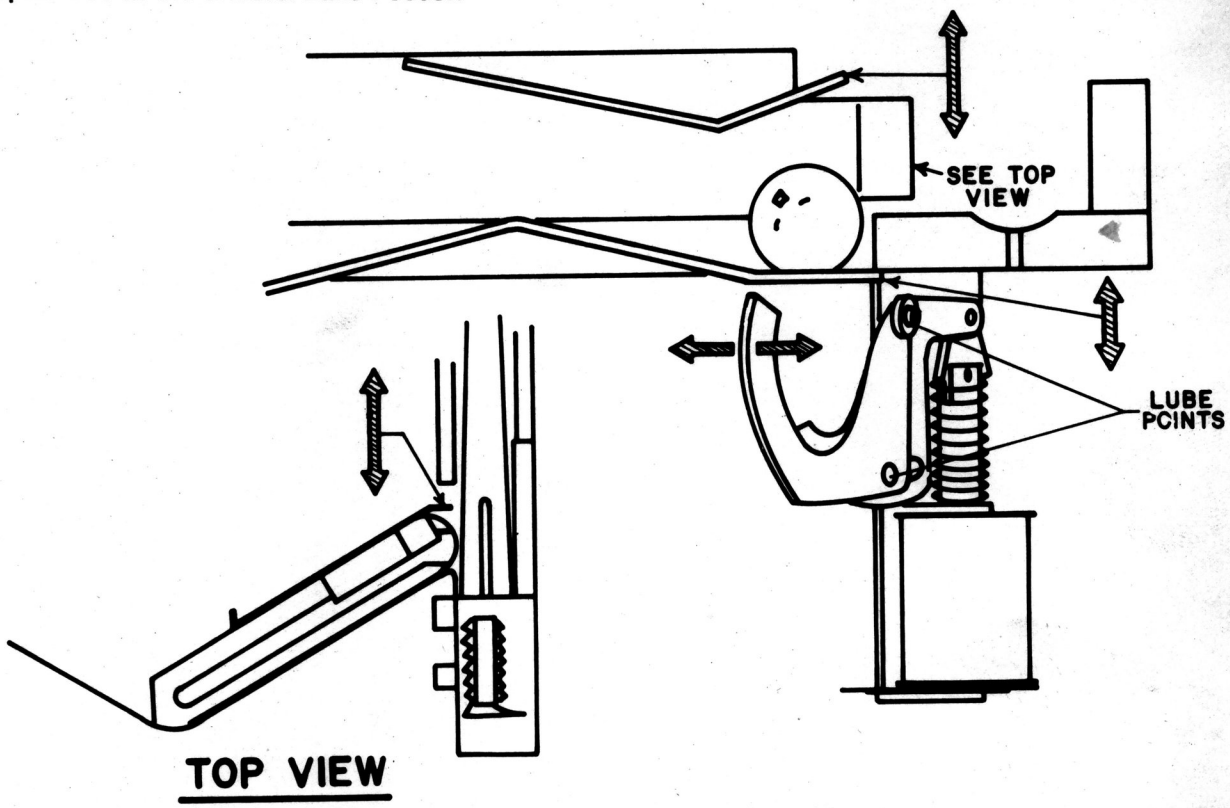

Figure 4. Adjustments and Lubrication Points, Shooter Lane Feeder.

Because of the functional design (arm-actuated via solenoid plunger operation), the pivot points of the Left and Right Kickers ("Slingshots") all require lubrication as a regular servicing procedure. Mechanical adjustments are simple and somewhat similar to the Shooter Lane Feeder. These mechanisms should also be checked for proper fit (snugly tight) where they attach to the playfield.

Lubrication to ensure proper operation also applies to the target blades of the 3-Bank Drop Target. Regular maintenance is essential to a game's continuing contribution to the operator's earnings.

SHAKER MOTOR SERVICING

Periodic checking of the Shaker motor brushes is recommended to keep this unique feature functioning properly. When intermittent operation or diminished shaking is apparent, it is suggested that examination of the brush assembly on either side of the motor may indicate a need for brush replacement (whenever it lacks sufficient length for the spring to press it against the commutator). (Refer to the Game Parts Information of Section 2 to obtain the part number of this replaceable part.) Switch off and unplug the game to avoid harm during the replacement process. Remove the Shaker Motor hood and gently pry the Brush Assembly from the side of the motor. Unsolder the wire from the Brush Assembly. Solder the wire to the new Brush Assembly and reinstall it in the motor. Remember to reinstall the Shaker Motor hood as part of completing the replacement process.

NOTES

Section 2

Game Parts Information

- ***Parts Lists & Diagrams***

Locations:
Game Circuit Boards and Major Mechanisms

Power Supply Board (D-12246)
Aux Power Driver Board (D-12247-568)
Backbox Interconnect Board (D-12313-568)
Audio Board (D-11581-568)
System 11-B CPU Board (D-11883-568)
Master Display Board (D-12232-1)
Lamp Boards

All Major Mechanism Assemblies of *EARTHSHAKER*

Solenoids/Flashers & Rubber Parts
Switches
Lamps
Playfield Parts

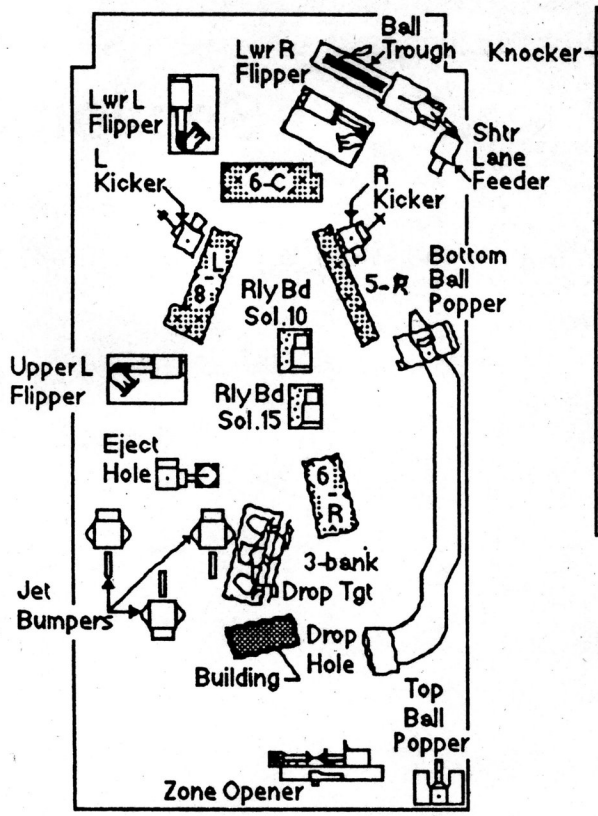

Underside of Playfield
Viewed in Raised Position

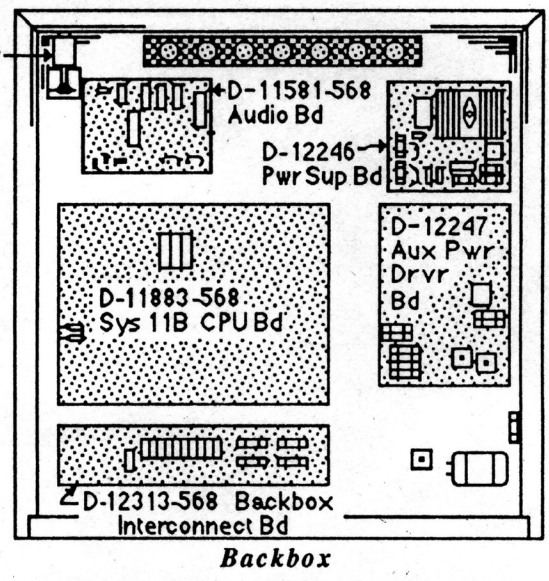

Backbox

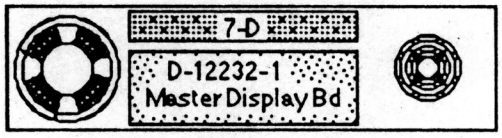

Display/Speaker Panel

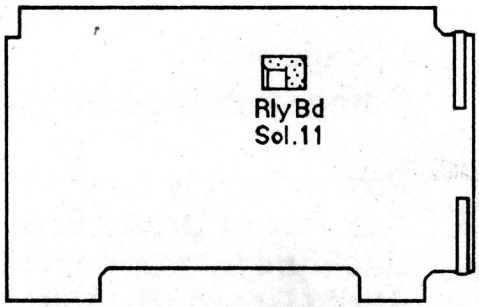

Inside of Insert Board
Viewed in Open Position

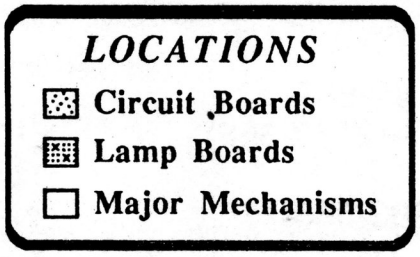

Locations Diagram - Game Circuit Boards and Major Mechanisms

C-11626-L-3	Lower Left Flipper
C-11626-R-3	Lower Right Flipper
C-9638	Ball Shooter Lane Feeder
B-9362-L-1	Coil & Bracket Assembly
B-9463	Left & Right Kicker Arm Assembly
B-11203-R-1	Coil & Bracket Assembly (Left)
B-11203-L-1	Coil & Bracket Assembly (Right)
C-12490	Lamp Board ("6-C")
C-12491	Lamp Board ("8-L")
C-12492	Lamp Board ("5-R")
C-11902-1	Relay Board (Sol. 10 Gen. Illum)
D-12642	Bottom Ball Popper Assembly
C-11626-L-6	Upper Left Flipper
C-11902-1	Relay Board (Sol. 15 Gen. Illum)
B-9361-R	Eject Hole Arm Assy
B-11203-L-1	Coil & Bracket Assembly
C-12496	Lamp Board (6-R")
B-9414	Jet Bumper (Top, R, L)
B-9415-1	Bumper Coil & Bracket Assy
B-10686-2	Knocker Assembly
D-11581-568	Audio Board
D-12246	Power Supply Board
D-11883-568	System 11B CPU Board
D-12247-568	Aux Power Driver Board
D-12313-568	Backbox Interconnect Board
D-12501	Lamp Board ("7-D")
D-12232-1	Master Display Board
C-11998-1	Relay Board (Sol. 11 Gen. Illum)

Playfield (Continued)

C-11223-1	3-Bank Drop Target
C-12559	3-Bank Opto Board
B-12728	Building Assembly
C-12427	Building Lamp Board
C-12429	Zone Opener Assembly
D-11335-2	Top Ball Popper

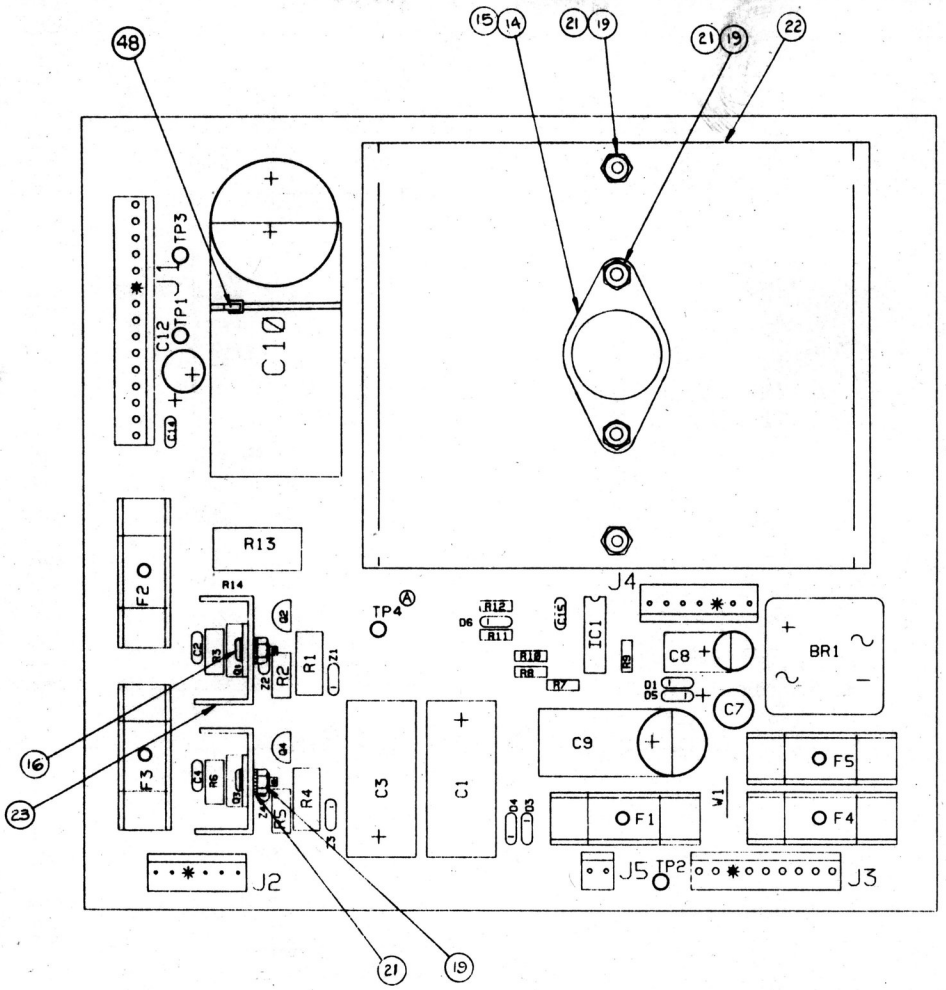

Power Supply

p/n D-12246

Item	Part No.	Ckt Designator	Description
1	5765-12317-00		Power Supply PCB
2	5733-12060-01	F1-F5	Fuse Holder
3	5731-09432-00	F4, F5	Fuse, 7A., S-B, 250v
4	5731-12328-00	F1	Fuse, 3/8A., S-B, 250v
5	5730-12327-00	F2, F3	Fuse 1/8 A., 250v
6	5791-10862-15	J1	Connector, 15-pin Hdr, Sq Pin .156
7	5791-10862-06	J2	Connector, 6-pin Hdr, Sq Pin .156
8	5791-10862-09	J3	Connector, 9-pin Hdr, Sq Pin .156
9	5100-09690-00	BR1	Bridge Rectifier, 35A., 200V
10	5164-12154-00	Q1	Transistor, MJE15030, NPN
11	5194-12155-00	Q3	Transistor, MJE15031, PNP
12	5194-09055-00	Q2	Transistor, MPSD52, PNP
13	5164-09056-00	Q4	Transistor, MPSD02, NPN
14	5162-09425-00	Q5	Transistor, 2N6057, NPN
15	5701-09652-00		Thermal Pad T0-3
16	4006-01003-06		Mach. Screw, 6-32 x 3/8
17	4006-01003-08		Mach. Screw, 6-32 x 1/2
18	20-9229		Thermal Compound
19	4406-01117-00		Nut, 6-32 Hex.
20	5010-09534-00	W1	Resistor,0Ω
21	4703-00007-00		Lockwasher, #6 Ext.
22	5705-12330-00		Heatsink 4"
23	5705-09199-00		Heatsink 6030B
24	5070-09054-00	D1, D3 - D6	Diode, 1N4004
25	5075-09059-00	ZR1, ZR3	Zener, 1N5990, 3.9v, 1/2w
26	5075-09060-00	ZR2, ZR4	Zener, 1N4764, 100v, 1w
27	5460-09424-00	IC1	IC, Volt. Reg., MC1723C5
28	5010-09069-00	R3, R6	Resistor, 330K, 5%, 1/2w, C.F.
29	5010-10631-00	R2, R5	Resistor, 1.2K, 5%, 1/2w
30	5010-09536-00	R1, R4	Resistor, 39K, 5%,1w
31	5013-09426-00	R7	Resistor, 2.15K, 1%, 1/4w, C. F.
32	5013-09427-00	R8	Resistor, 4.99K, 1%, 1/4w, C. F.
33	5010-09541-00	R9	Resistor, 2.7K, 2%,1/4w, C. F.
34	5010-09085-00	R10	Resistor, 1.5K, 5%,1/4w, C. F.
35	5010-09428-00	R11	Resistor, 1.5K, 2%, 1/4w, C. F.
36	5010-09508-00	R12	Resistor, 270Ω, 2%, 1/4w, C. F37
37	5012-09429-00	R13	Resistor, 0.12Ω, 5%,5w
38	5040-12324-00	C1, C3	Capacitor, 150 mfd, 160v, radial
39	5043-09072-00	C2, C4	Capacitor, 0.1 mfd, 500v, disc
40	5040-09421-00	C7	Capacitor, 100 mfd, 25v, radial
41	5040-09422-00	C8	Capacitor, 47 mfd, 50v, radial
42	5040-09420-00 5040-08893-00	C9	Capacitor, 1000 mfd, electr, 25v, axial or radial
43	5040-09419-00	C10	Capacitor, 18,000 mfd, electr, 20v, axial
44	5040-09423-00	C12	Capacitor, 330 mfd, electr, 10v,radial
45	5043-09446-00	C14	Capacitor, 0.1 mfd, 50v, disc
46	5043-09065-00	C15	Capacitor, 470 pfd
47	5824-09248-00	TP1-TP4	Terminal, #1502-1 (Test Post)
48	03-7947		Tie Wrap, 8" Long

NOTES:
1. Heat sink compound must be applied between transistor and heat sink.
2. Observe index mark on integrated circuit, polarity of capacitors and diodes, and position of transistors.
3. The view of Q5 and its related heat sink and hardware is from the bottom of the heatsink, to clarify installation.

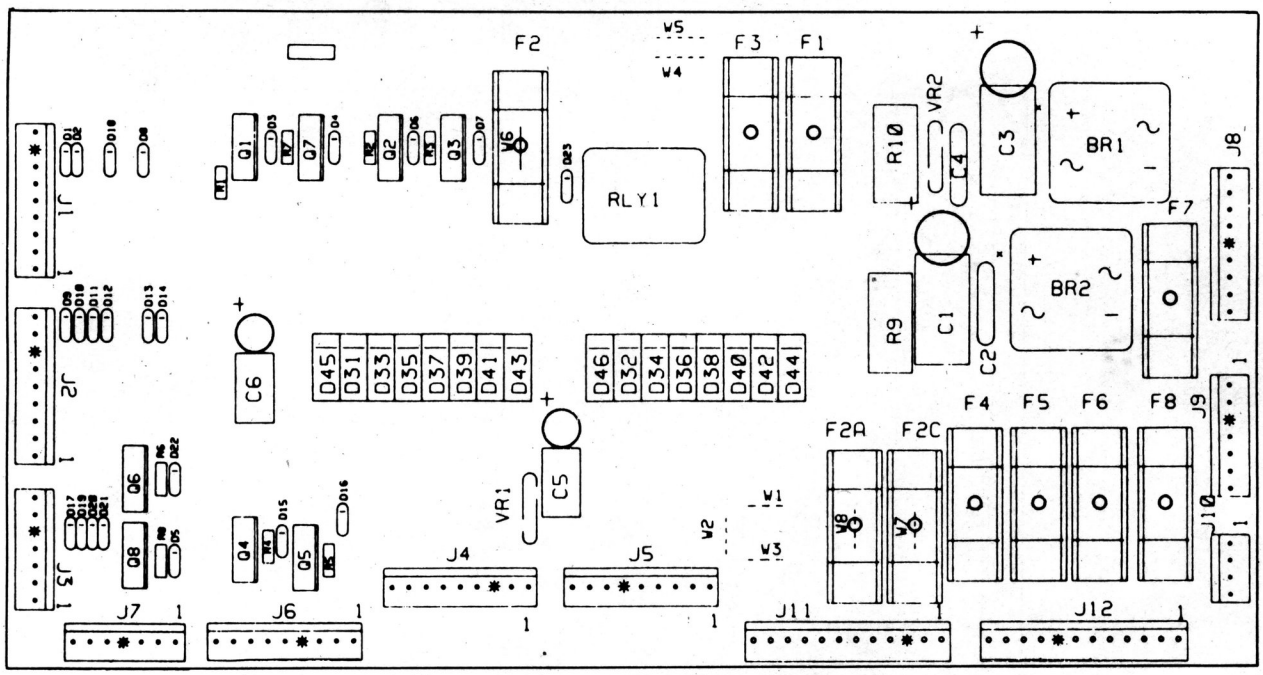

Aux Power Driver Unit Board

p/n D-12247-568

Part No.	Ckt Designator	Description
5763-12184-00		Bare P.C. Board
5040-09537-00	C1, C3	Capacitor, 100 µfd., 100v, Radial
5040-12181-00	C5, C6	Capacitor, 10 µfd., 100v, Radial
5043-09072-00	C2, C4	Capacitor, 0.1 µfd., 500v
5010-09160-00	R1 - R8	Resistor, 220Ω, 1/4w C.F., 5%
5012-12238-00	R9	Resistor, 3.3KΩ, 5w, 10%
5010-09534-00	W1, W3, W4, W6	Resistor, 0Ω, 1/4w
5017-12180-00	VR1, VR2	Varistor, 100v
5100-09690-00	BR1, BR2	Bridge Rectifier, 35A, 200v
5070-08785-00	D1 - D23	Diode, 1N4003
5070-09045-00	D31 - D46	Diode, MR501
5191-12179-00	Q1 - Q8	Transistor, TIP36C

Part No.	Ckt Designator	Description
5580-09555-01	K1	Relay, DPDT, 13A
5733-12060-01		Fuse Holder
5731-08665-00	F5, F6	Fuse, 2A, S-B, 250v
5731-09128-00	F1, F2A, F4	Fuse, 2-1/2A, S-B, 250v
5731-09651-00	F2C, F3	Fuse, 5A, S-B, 250v
5731-06314-00	F7	Fuse, 4A, S-B, 250v
5731-09432-00	F8	Fuse, 7A, S-B, 250v
5791-10862-09	J1, J2, J4 - J6, J8	Connector, 9-pin Hdr, Sq Pin
5791-10862-07	J3, J7, J9	Connector, 7-pin Hdr, Sq Pin
5791-10862-12	J11, J12	Connector, 12-pin Hdr, Sq Pin
5791-10862-04	J10	Connector, 4-pin Hdr, Sq Pin
16-8850-235		P.C.B. I.D. Label

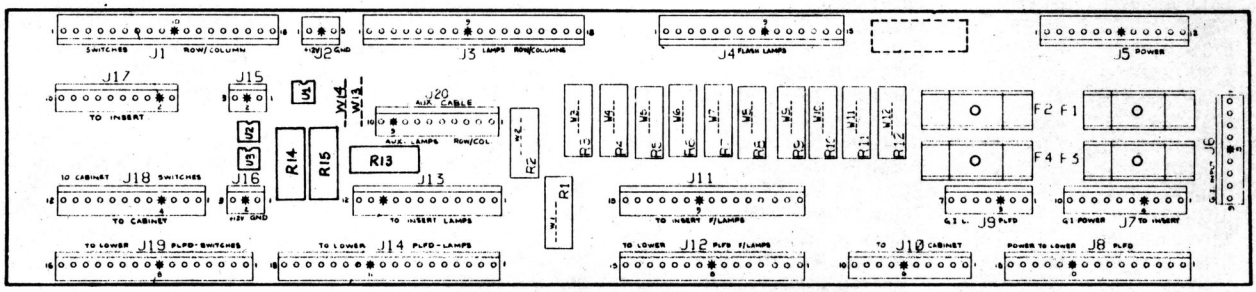

Backbox Interconnect Board

p/n D-12313-568

Part No.	Ckt Designator	Description
5768-12332-00		Master Interconnect Board
16-8850-236		P.C.B. I.D. Label
5010-09534-00	W11, W12	Resistor, 0Ω
5012-12238-00	R14, R15	Resistor, 3.3KΩ, 5w, 10%
5012-12337-00	R13	Resistor, 1.5KΩ, 5w, 10%
5012-10024-00	R1-R3, R8-R10	Resistor, 5.6Ω, 5w, 10%
5012-12163-00	R4-R7	Resistor, 11Ω, 5w, 10%
5490-10892-00	U1 - U3	Opto Isolator 4N25
5731-09651-00	F1-F4	Fuse, 5A.S.B., 250v

Part No.	Ckt Designator	Description
5733-12060-01		Fuse Holder, F1-F4
5791-10862-03	J2, J16	Connector, 3-pin Hdr Sq Pin .156
5791-10862-07	J9	Connector, 7-pin Hdr Sq Pin .156
5791-10862-09	J6	Connector, 9-pin Hdr Sq Pin .156
5791-10862-10	J7, J10	Connector, 10-pin Hdr Sq Pin .156
5791-10862-12	J5, J13, J18	Connector, 12-pin Hdr Sq Pin .156
5791-10862-15	J8	Connector, 15-pin Hdr Sq Pin .156
5791-10862-16	J4, J11, J12, J19	Connector, 16-pin Hdr Sq Pin .156
5791-10862-18	J1, J3, J14	Connector, 18-pin Hdr Sq Pin .156

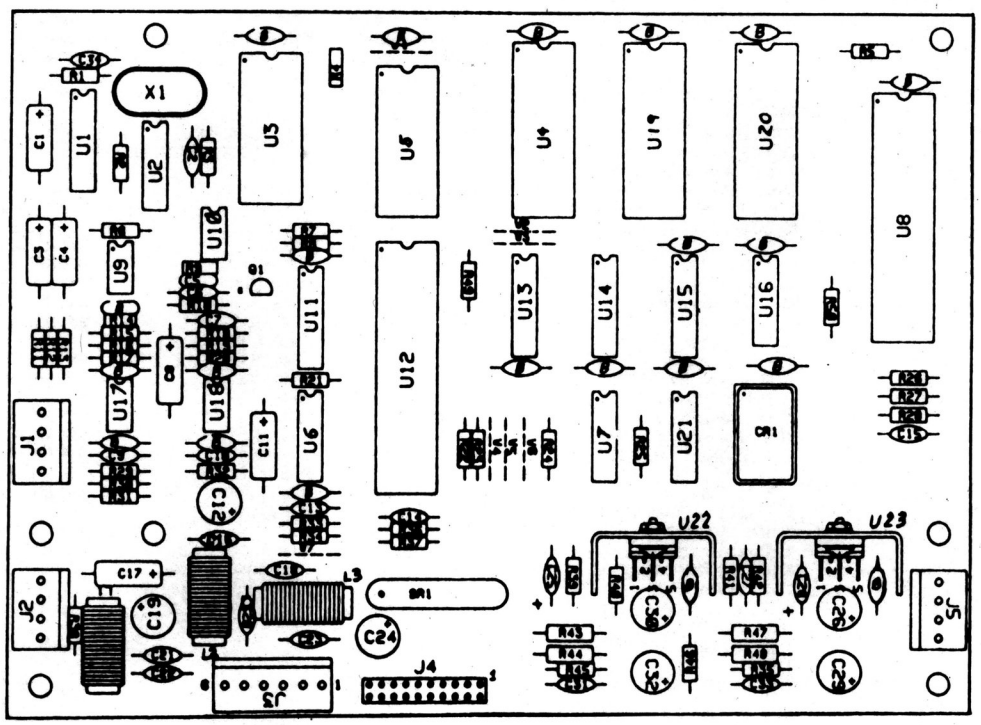

Audio Board Assembly

p/n D-11581-568

Part No.	Ckt Designator	Description
5766-12130-00		Bare P. C. Board
5371-11087-00	U1	IC, D/A Conv, YM3012
a) 5700-09006-00		Socket, IC, 16-pin (U1)
5370-11086-00	U3	IC, Sound Processor, YM2151
a) 5700-09004-00		Socket, IC, 24-pin (U3)
5400-10320-00	U8	IC, µProcessor, MC68B09E
a) 5700-08985-00		Socket, IC, 40-pin (U8)
A-5343-568-5	U4	IC, Audio ROM 1
A-5343-568-6	U19	IC, Audio ROM 2
a) 5700-10176-00		Socket, IC, 28-pin (U4, U19)
5371-09152-00	U11	IC, D/A Convtr, MC1408
5430-10322-00	U12	IC, PIA, MC68B21
5340-10139-00	U5	IC, RAM/S 5516-2 2Kx8
5281-09487-00	U16	IC, Dual D Flipflop, 74LS74
5281-10043-00	U13	IC, 74LS175
5281-09235-00	U21	IC,Triple NAND, 74LS10
5370-09321-00	U9, U10, U17	IC, Op Amp, MC1458
5281-09215-00	U2	IC, Hex Inv, 74LS04
5281-09246-00	U14	IC, 2-4 Dec, 74LS139
5281-09745-00	U15	IC, Dual Mux, 74LS138
5370-09156-00	U22, U23	IC, Audio Amp, TDA2002
a) 5705-09199-00		Heatsink, #6030B
b) 4006-01003-06		Mach. Screw, 6-32 x 3/8
c) 4406-01117-00		Nut, 6-32 Hex.
d) 4703-00007-00		Lockwasher, #6 Ext.
5160-10269-00	Q1	Transistor, 2N3904, NPN
5060-10396-00	SP1	SIP 4.7K & 470pfd, 8R8C
5010-09181-00	R44, R48	Resistor, 1.0Ω, 1/2w, 5%
5010-09161-00	R35, R45	Resistor, 2.2Ω, 1/4w, 5%
5010-09361-00	R43, R46, R47	Resistor, 220Ω, 1/2w, 5%
5010-09358-00	R41, R42	Resistor, 1K, 1/4w, 5%
5010-08998-00	R2, R3, R12	Resistor, 2.2K, 1/4w, 5%
5010-08983-00	R7-R9	Resistor, 3.3K, 1/4w, 5%

Part No.	Ckt Designator	Description
5010-08991-00	R1, R4, R5, R11, R26 - R28, R33, R36, R37, R49, R50	Resistor, 4.7K, 1/4w, 5%
5010-09034-00	R14 - R17	Resistor, 10K, 1/4w, 5%
5010-09324-00	R6, R38	Resistor, 27K, 1/4w, 5%
5010-09162-00	R39	Resistor, 100K, 1/4w, 5%
5010-10258-00	R40	Resistor, 1M, 1/4w, 5%
5010-09179-00	R10	Resistor, 3.3M, 1/4w, 5%
5010-09534-00	W9	Resistor, 0Ω, 1/4w, 5%
5040-09343-00	C1, C3, C4, C8	Capacitor, 10µfd, 20v, ±20%
5040-10974-00	C12, C19, C24	Capacitor, 100µfd, 35v
5040-09776-00	C26, C30	Capacitor, 470µfd, 16v; +50, -10%
5040-12006-00	C29, C32	Capacitor, 1000µfd, 16v, 20%
5041-09243-00	C25, C28	Capacitor, 10µfd, 10v,±10%
5043-08980-00	C5, B (17)*	Capacitor, 0.01µfd, 50v,+80, -20%
5043-08996-00	C31, C33	Capacitor, 0.1µfd, 50v, ±20%
5043-09065-00	C13 - C15	Capacitor, 470 pfd, 50v, ±20%
5043-09492-00	C2, C34	Capacitor, 100 pfd, 50v, ±10%
5043-09844-00	C6	Capacitor, 47 pfd, 50v, ±20%
5043-09845-00	C16, C18, C20 - C23, C27	Capacitor, 1000 pfd, 50v, ±20%
5520-09020-00	X1	Crystal, 3.58 MHz
5521-10931-00	CR1	Oscillator, 8 MHz
5551-09822-00	L1 - L3	Inductor, 4.7 µH, 3A
5791-09437-00	J4	Connector, 20 pin, (Hdr), Rib. Cbl
5791-10862-04	J1, J2, J5	Connector, 4 pin (Hdr)
5791-10862-06	J3	Connector, 6 pin (Hdr)
16-8850-00		P.C.B. I.D. Label
20-9229		Thermal Compound

Notes: * 17 capacitors (shown on diagram with "B" symbol) provide +5VDC filtering for ICs.
All capacitors are ceramic, 50v, axial, unless otherwise noted.
All resistors are 5%, 1/4w, Carbon Film, unless otherwise noted.

System 11B CPU Board

p/n D-11883-568

Item	Part No.	Ckt Designator	Description
1	5764-12206-00		Bare P. C. Board
2	5370-09691-00	U3	IC, CVSD Mod., 55536
3	5370-09321-00	U4, U5	IC, Dual Op Amp, 1458
4	5281-09308-00	U16	IC, Octal Bus Xcvr, 74LS245
5	5430-08972-00	U9, U10, U38, U41, U42, U51, U54	IC, PIA, MC6820/6821
6	5340-10139-00	U25	IC, 2K x 8 CMOS Static RAM
7	5280-09010-00	U44	IC, 4-16 Decoder, 74154
8	5281-09246-00	U7, U8, U12	IC, 2-4 Decoder, 74LS139
9	5075-09406-00	ZR3 - ZR8	Diode, Zener, 6.2v, 0.5w
10	5164-10998-00	Q42 - Q49	Transistor, NPN, 2N5550, TO-92
11	5281-09487-00	U6	IC, Dual D Flip-flop,74LS74
12	5431-09449-00	U43	IC, Timer, MC1455
13	5310-09236-00	U29	IC, 14-b Counter, 4020
14	5281-09743-00	U32	IC, Quad 2-Input AND, 74LS08
15	5281-09247-00	U14	IC, Quad 2-Input NOR, 74LS02
16	5281-09235-00	U35	IC, Triple 3-Input NAND, 74LS10
17	5280-09013-00	U36	IC, Hex Inverter, 7404
18	5281-09499-00	U31, U34	IC, Quad 2-Input NAND, 74LS00
19	5281-10014-00	U33	IC, Dual 4-Input NAND, 74LS20
20	5281-09486-00	U28	IC, Octal D Flip-flop, 74LS374
21	5371-09152-00	U2	IC, D/A Converter, MC1408
22	5281-09745-00	U37	IC, 3-8 Decoder, 74LS138
23	5340-09878-00	U23	IC, 2K x 8 Static RAM, 2016
24	Not Used		
25	5281-09867-00	U11, U13, U40	IC, Octal Buffer, 74LS244
26	5280-08973-00	U17-U20, U52, U53	IC, Quad 2-Input AND, 7408
27	5280-08974-00	U55, U56	IC, Hex Inverter, 7406
28	5310-09155-00	U30, U39	IC, Quad 2-Input NAND, MC14011
29	5280-08948-00	U45, U50	IC, Quad 2-Input NOR, 7402
30	5280-09309-00	U49	IC, Hex Buffer, 7407
31	5671-09019-00	LED1-LED3	LED, Red, Display
32	5521-10506-00	CR1	Oscillator, 4 MHz
33	5162-08976-00	Q51, Q53, Q55, Q57, Q59, Q61, Q63, Q65	Transistor, NPN Darl. 2N6427, TO-92
34	5191-08978-00	Q52, Q54, Q56, Q58, Q60, Q62, Q64, Q66	Transistor, PNP, TIP42, TO-220
35	5162-09410-00	Q6-Q9, Q14-Q17, Q22-Q25, Q30-Q33, Q69, Q71, Q73, Q75, Q77, Q79, Q80-Q87	Transistor, NPN, TIP122, TO-220
36	5160-08938-00	Q2-Q5, Q10-Q13, Q18-Q21, Q26-Q29, Q34-Q38, Q41, Q67, Q68, Q70, Q72, Q74, Q76, Q78	Transistor, NPN, 2N4401, TO-92
37	5160-10269-00	Q1, Q40	Transistor, NPN, 2N3904, TO-92
38	5190-09016-00	Q39, Q50	Transistor, PNP, 2N4403, TO-92
39	5130-09014-00	S1-S8	SCR, 30v, 0.8A, 2N5060
40	5070-06258-00	D3-D19	Diode, 1N4001
41	5070-08919-00	D2	Diode, 1N4148, 150mA
42	5070-09266-00	D1	Diode, 1N5817, 1.0A
43	5075-09018-00	ZR1	Diode, Zener, 1N5996A, 6.8v, 0.5w
44	5075-09059-00	ZR2	Diode, Zener, 1N5990, 3.9v, 0.5w
45	5010-08992-00	R94, R97, R100, R103, R106, R109	Resistor, 560Ω, 5%, 1/4w, C. F.
46	5010-09039-00	R56	Resistor, 10Ω, 5%, 1/4w, C. F.
47	5010-09534-00	W1, W2, W4, W5, W7, W8, W11, W14, W16, W17, W19	Resistor, 0Ω, 5%, 1/4w, C. F.
48	5010-08991-00	R31, R32, R35, R52 R55, R68, R92, R146	Resistor, 4.7KΩ, 5%, 1/4w, C. F.
49	5010-09358-00	R54, R57, R58, R64, R66, R138-R145	Resistor, 1.0KΩ, 5%, 1/4w, C. F.
50	5010-09113-00	R79	Resistor, 33KΩ, 5%, 1/4w, C. F.
51	5010-08983-00	R7, R8, R10, R70, R80	Resistor, 3.3KΩ, 5%, 1/4w, C. F.
52	5010-09034-00	R11-R14, R25, R26, R53, R60, R65, R90	Resistor, 10KΩ, 5%, 1/4w, C. F.
53	5010-09086-00	R81	Resistor, 6.8KΩ, 5%, 1/4w, C. F.
54	5010-09363-00	R3	Resistor, 5.6KΩ, 5%, 1/4w, C. F.
55	5010-08997-00	R23, R24, R91, R93, R96, R99, R102, R105, R108, R112, R115, R118, R121, R124, R127, R130, R133	Resistor, 2.7KΩ, 5%, 1/4w, C. F.
562	5012-09037-00	R113, R116, R119, R122, R125, R128, R131, R134	Resistor, 0.4Ω, 5%, 3w, Wire-Wnd.
57	5010-08993-00	R36-R51, R95, R98, R101, R104, R107, R110	Resistor, 68Ω, 5%, 1/2w, C. F.
582	5012-10860-00	R82-R89	Resistor, 27Ω, 5%, 2w, C. F.
59	Not Used		
60	Not Used		
61	5010-10987-00	R19	Resistor, 56KΩ, 5%, 1/4w, C. F.
62	5010-10003-00	R62, R63	Resistor, 390Ω, 5%, 1/4w, C. F.
63	5010-10171-00	R67	Resistor, 56Ω, 5%, 1/4w, C.F.
64	5010-10170-00	R69	Resistor, 47Ω, 5%, 1/4w, C. F.
65	5010-09160-00	R59, R61, W12, W13	Resistor, 220Ω, 5%, 1/4w, C. F.
66	5010-09416-00	R33, R34, R71-R78, R135-R137	Resistor, 470Ω, 5%, 1/4w, C. F.
67	5010-09179-00	R9	Resistor, 3.3MΩ, 5%, 1/4w, C. F.
68	Not Used		
69	5010-10631-00	R111, R114, R117, R120, R123, R126, R129, R13	Resistor, 1.2KΩ, 5%, 1/2w, C. F.
70	Not Used		
71	Not Used		
72	5010-09120-00	R17	Resistor, 270KΩ, 5%, 1/4w, C. F.
73	5010-09333-00	R15, R16, R18	Resistor, 180KΩ, 5%, 1/4w, C. F.
74	5010-09324-00	R29, R30	Resistor, 27KΩ, 5%, 1/4w, C. F.
75	5010-09269-00	R20, R21	Resistor, 12KΩ, 5%, 1/4w, C. F.
76	5010-09356-00	R27, R28	Resistor, 820Ω, 5%, 1/4w, C. F.
77	5019-09783-00	SR18	SIP, 9R, 10-pin, 6.8KΩ, .125w/R, 5%
78	5019-09362-00	SR3, SR15, SR17, SR19, SR20	SIP, 9R, 10-pin, 4.7KΩ, .125w/R, 5%
79	5019-09808-00	SR4, SR6, SR11	SIP, 9R, 10-pin, 560Ω, .125w/R, 5%
80	5019-09785-00	SR16	SIP, 9R, 10-pin, 2.2KΩ, .125w/R, 5%
81	5019-10472-00	SR14	SIP, 9R, 10-pin, 3.3KΩ, .125w/R, 5%
82	5019-09669-00	SR8	SIP, 9R, 10-pin, 1.0KΩ, .125w/R, 5%
83	5019-09780-00	SR9, SR10	SIP, 4R, 8-pin, 1KΩ, 5%
84	5019-09786-00	SR1, SR2	SIP, 5R, 6-pin, 4.7KΩ, .125w/R, 5%
85	5019-09792-00	SR5, SR7	SIP, 9R, 10-pin, 2.7KΩ, .125w/R, 5%
86	5060-10396-00	SRC1 - SRC5, SRC7 - SRC9	SIP, 8R, 8C,10-pin, 4.7KΩ & 470pfd
87	5010-08774-00	R22	Resistor, 22KΩ, 5%, 1/4w, C. F.
88	5043-08980-00	C14, C17-C21, C31, C32, C49-C56, C59, + 54 Bypass, marked B	Capacitor, 0.01 µfd, 50v(+80,-20%), Axial
89	5043-09845-00	C22, C23, C25, C27, C28	Capacitor, 1K pfd, 50v(±20%), Axial
90	5043-08996-00	C9, C70-75, C77, C78	Capacitor, 0.1 µfd, 50v(±20%), Axial
91	5040-09343-00	C8, C15	Capacitor, 10 µfd, Electr., 20v(±20%), Axial
92	5043-09844-00	C7	Capacitor, 47 pfd, 50v(±20%), Axial
93	5040-10974-00	C24, C26, C29	Capacitor, 100 µfd, Electr., 25v(+50,-10%), Axial
94	Not Used		
95	5045-09796-00	C60-C67	Capacitor, 0.1 µfd, Polycarbonate Rad., 100v(±10%)
96	5043-09065-00	C33-C40, C68, C69, C76, C10, C12	Capacitor, 470 pfd, 50v(±20%), Axial
97	5040-09545-00	C30	Capacitor, 22 µfd, Electr., 10v(+50,-10%), Axial
98	5041-09031-00	C58	Capacitor, 1 µfd, Tant., 25v(±20%), Axial
99	5043-09030-00	C16, C57	Capacitor, 0.047 µfd, 50v(±20%), Axial
100	Not Used		
101	5043-09492-00	C11	Capacitor, 100 pfd, ceramic,100v(±20%)
102	Not Used		
103	5048-10992-00	C13	Capacitor, 4700 pfd, ceramic,50v(±10%)
104	5551-09822-00	L1-L3	Inductor, 4.7 µH, 3A
105	5641-09312-00} 5641-09653-00}	SW1, SW2	Switch, Pushbutton, DPDT, 100v, 5A
106	5880-09022-00	B1-B3	Battery, Alkaline, 1.5v, AA
107	20-9491	W18, W19	Bus Wire, Jumper
108	5881-09021-00		Battery Holder, #171
109	5700-10176-00		IC Socket, 28 pin
a)	A-5343-568-1	U26	IC, Game ROM 2, 27128
b)	A-5343-568-2	U27	IC, Game ROM 1, 27256
c)	A-5343-568-3	U22	IC, Sound ROM 2, 27256
d)	A-5343-568-4	U21	IC, Sound ROM 1, 27256
110	5700-08985-00		IC Socket, 40 pin
a)	5400-09150-00	U15	IC, µProcessor, 6802
b)	5400-09150-00	U24	IC, µProcessor, 6802
111	5824-09248-00	TP1, TP2	Test Point
112	- 115 Not Used		
116	20-9229		Thermal Compound
117	5580-08994-01	K1	Relay, 4-pole, 40Ω, 6v
118	5791-10862-09	1J1, 1J2, 1J4-1J8, 1J10-1J12, 1J17-1J19	Connector, 9 pin (Hdr)
119	5791-10862-04	1J13, 1J14,1J16	Connector, 4 pin (Hdr)
120	5791-10862-12	1J3	Connector, 12 pin (Hdr)
121	Not Used		
122	5791-10850-00	1J22	Connector, 26 pin Ribbon (Hdr)
123	5791-09437-00	1J21	Connector, 20 pin Ribbon (Hdr)

NOTES:

1. For Schematic, refer to drawing #16-9019.
2. Items 56 and 58 (resistors) must be mounted 1/8" above PCB surface.
3. Standard Jumper: W1, W2, W4, W5, W7, W8, W11, W14, W16, W17, W19.

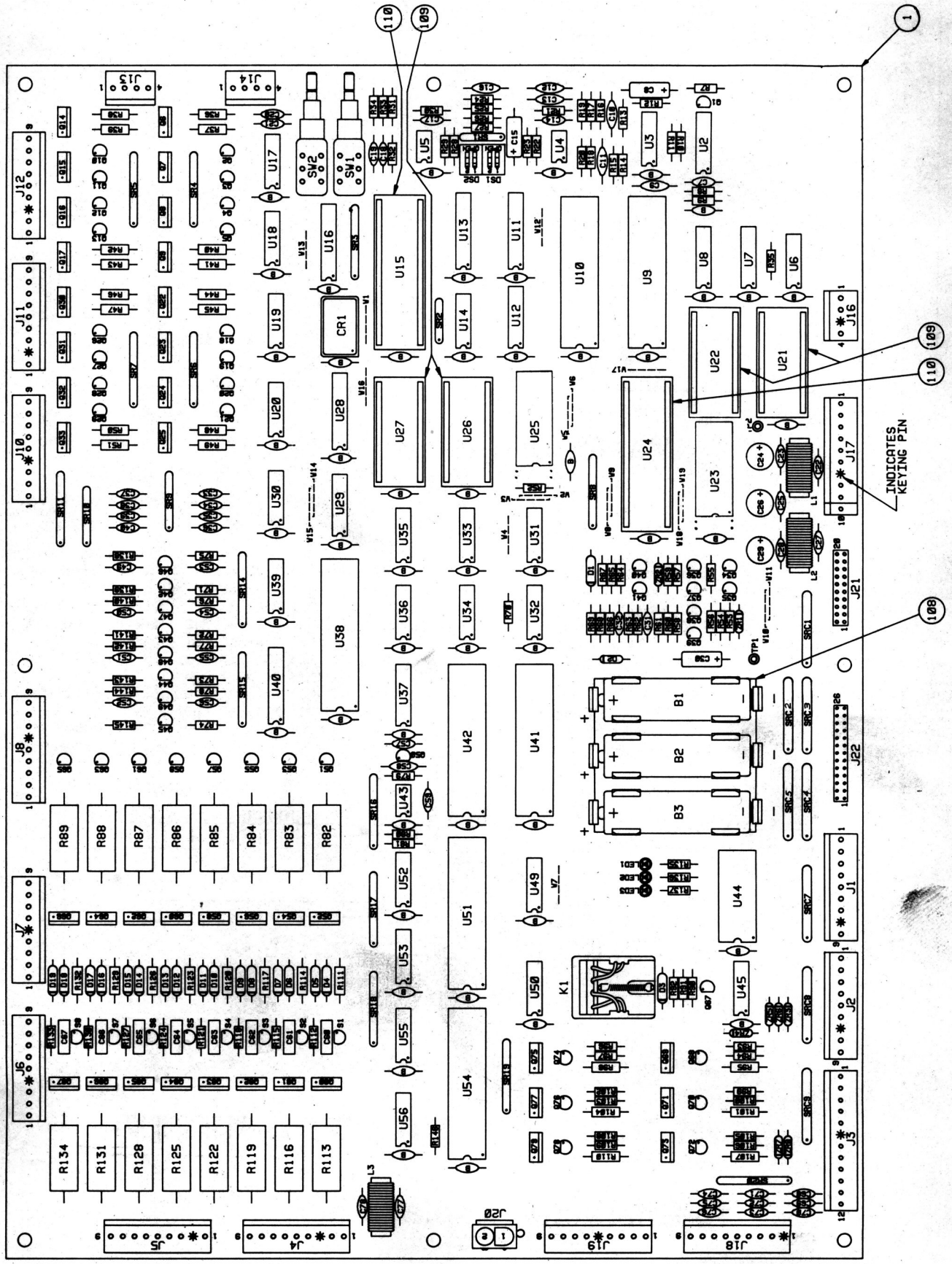

SYSTEM 11B CPU BOARD (D-11883)

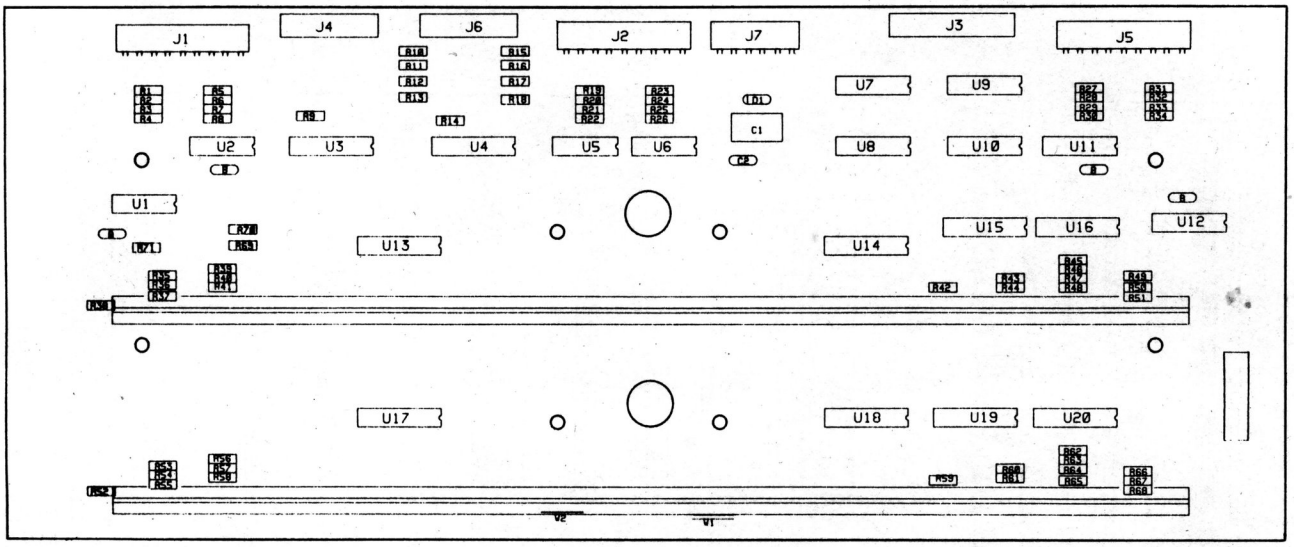

Master Display Board

p/n D-12232-1

Part No.	Ckt Designator	Description
5760-12306-00		Bare P.C. Board
5670-12308-00	DSPL1, DSPL2	Display, 16-Character, A/N
5310-09882-00	U1, U2, U5, U6	I.C. 4001
5310-08975-00	U7 - U12	I.C. 4049
5680-08968-00	U13, U14, U17, U18	I.C. 6184, Anode Driver
5680-08969-00	U15, U16, U19, U20	I.C. 7180, Cathode Driver
5040-09343-00	C1	Axial Cap, 10 µfd, 20v, ±20%
5043-08980-00	Bypass	Axial Cap, 0.01µfd, 50v, +80, -20%
5075-09135-00	D1, D2	Zener, 1N4740A, 10v, 1w
5791-10869-09	J1, J2, J5	9-pin Header, Rt. Angle
5791-10869-06	J7	6-pin Header, Rt. Angle
23-6634		Cover, Display

Part No.	Ckt Designator	Description
5791-10851-00	J3	26-pin Header, Rt. Angle
5010-08773-00	R1-R8, R19-R35, R41, R43, R45, R71	Resistor, 18KΩ, 1/4w, 5%
5010-10258-00	R38, R52	Resistor, 1MΩ, 1/4w, 5%
5010-10927-00	R36, R39, R40, R42, R47, R48, R50, R51, R54, R56, R57, R59, R64, R65, R67, R68	Resistor, 8.2KΩ, 1/2w, 5%
5010-08981-00	R37, R44, R46, R49 R55, R61, R63, R66	Resistor, 10KΩ, 1/2w, 5%
03-8088-1	Support	Support, Display
16-8850-234		P.C.B. I.D. Label

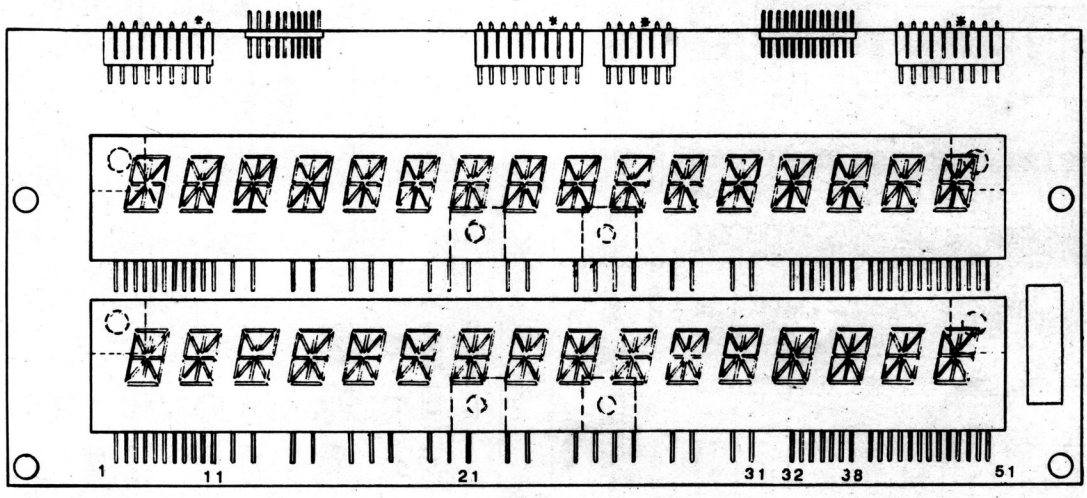

16-Character Display Glass

p/n 5670-12308-00

Building Lamp Board
p/n C-12427

Part No.	Description
5768-12355-00	Building Lamp P.C.B.
24-8767	Twist Lamp Socket
24-8768	Bulb, #555 (6.3v, .25A)
5070-09054-00	Diode, 1N4004, 1.0A
5791-10869-12	Header, 12-pin sq post

Lamp Board ("6-C")
p/n C-12490

Part No.	Description
5768-12369-00	Bonus PC Board
24-8768	Bulb, #555 (6.3v, .25A)
24-8767	Twist Lamp Socket
5070-09054-00	Diode, 1N4004, 1.0A
5791-10871-08	Header, 8-pin sq post

Lamp Board ("8-L")
p/n C-12491

Part No.	Description
5768-12370-00	PC Board
24-8767	Twist Lamp Socket
24-8768	Bulb, #555 (6.3v, .25A)
5070-09054-00	Diode, 1N4004, 1.0A
5791-10871-10	Header, 10-pin sq post

Lamp Board ("5-R")
p/n C-12492

Part No.	Description
5768-12371-00	PC Board
24-8767	Twist Lamp Socket
24-8768	Bulb, #555 (6.3v, .25A)
5070-09054-00	Diode, 1N4004, 1.0A
5791-10871-07	Header, 7-pin sq post

Lamp Board ("6-R")
p/n C-12496

Part No.	Description
5768-12375-00	PC Board
24-8767	Twist Lamp Socket
24-8768	Bulb, #555 (6.3v, .25A)
5070-09054-00	Diode, 1N4004, 1.0A
5791-10871-07	Header, 7-pin sq post

Lamp Board ("7-D")
p/n D-12501

Part No.	Description
5768-12377-00	PC Board
24-8767	Twist Lamp Socket
24-8768	Bulb, #555 (6.3v, .25A)
5070-09054-00	Diode, 1N4004, 1.0A
5791-10871-09	Header, 9-pin sq post

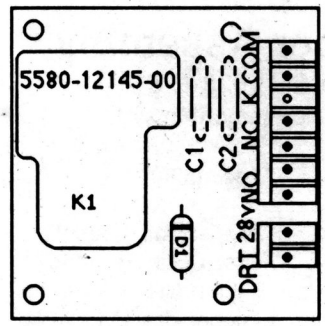

Relay Board (Sol. 10 & 15 Gen. Illum)
p/n C-11902-1

Part No.	Description
5768-12221-00	PC Board
5070-09054-00	Diode, 1N4004, 1.0A
5580-12145-00	Relay, 24vdc, 30A
5791-12273-02	Header, 2-pin sq post (J1)
5791-12273-07	Header, 7 pin sq post (J2)

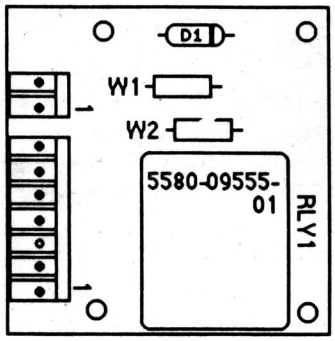

Relay Board (Sol. 11 Gen. Illum)
p/n C-11998-1

Part No.	Description
5768-12243-00	PC Board
5070-09054-00	Diode, 1N4004, 1.00A (D1)
5580-09555-01	Relay, 24vdc, 30A (K1)
5010-09534-00	Resistor, 0Ω (W1, W2)
5791-12273-02	Header, 2-pin sq post (J1)
5791-12273-07	Header, 7-pin sq post (J2)

Lower Right Flipper
p/n C-11626-R-3

Item	Part No.	Description
1	HW-30018-6	Wire, 18 AWG, Blue
2	03-7520-2	Ty-Wrap, Nylon
3	20-6516	Speednut, Tinnerman
4	5045-12098-00	Capacitor, 2.2 µFd, 250V, 20%
5	RM-21-06	Sleeve, Vinyl (Cap. leads)
6	4010-01066-06	Cap Screw, 10-32 x 3/8, SH
7	4701-00004-00	Lockwasher, #10 split
8	A-12111	Flipper Stop Assembly
9	FL-11630	Flipper Coil (Red), (* - Refer to Note 3)
10	4006-01017-04	Mach. Screw, 6-32 x 1/4, P-RH-S
11	01-7695	Solenoid Bracket
12	10-376	Coil Plunger Spring
13	B-10655-R	Crank Link Assembly, Right
a)	02-4179	Link Spacer Bushing
b)	4010-01086-14	Cap Screw, 10-32 x 7/8, SH
c)	4700-00023-00	Washer, 5/8 o.d. x 13/64 i. d. x 16 ga.
d)	4701-00004-00	Lockwasher, #10 split
e)	4410-01132-00	Nut, 10-32 ESNA
f)	A-10656**	Flipper Link Assembly
1.)	02-4219	Coil Plunger
2.)	20-9370-1	Spring Pin, 5/32 dia. x 7/16
3.)	03-8050-1	Flipper Link
g)	B-10657-R	Flipper Crank Assembly, Right
1.)	01-8073-R	Flipper Crank, Right
2.)	17-1037	Crank Washer
3.)	4010-01066-18	Cap Screw, 10-32 x 1-1/8, HCS
4.)	4410-01127-00	Nut, 10-32 Hex Hd.
5.)	4700-00107-00	Washer, 5/8 o.d. x 13/64 i. d. x 12 ga.
6.)	4701-00004-00	Lockwasher, #10 split
7.)	RM-23-06	Tubing, H. S. 1/4 DWP
14	23-6577	Bumper Plug
15	03-7568	Flipper Bushing
16	4006-01005-06	Mach. Screw, 6-32 x 3/8, P-PH
17	4406-01117-00	Nut, 6-32 Hex
18	C-11627-R	Flipper Base Assembly, R.
19	06-14G	Insulating Blade
20	4105-01019-10	Sh. Metal Screw, #5 x 5/8
21	4701-00002-00	Lockwasher, #6 split
22	23-6622	Tape, Double-sided
23	03-7811	End of Stroke (EOS) Switch

** - Also see separate diagram

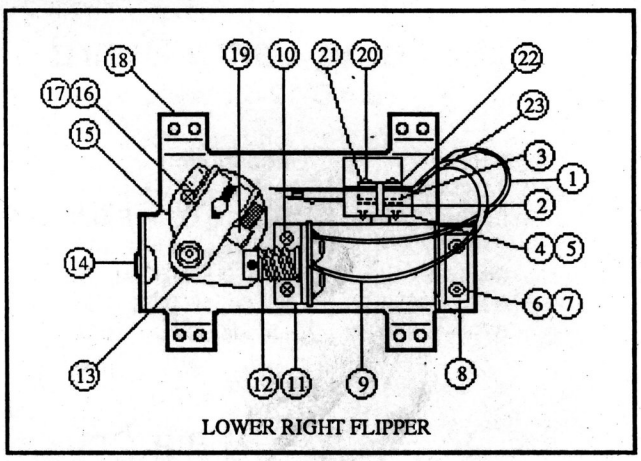

LOWER RIGHT FLIPPER

Flipper Assembly Notes:

1 Each Flipper Assembly on the Lower Playfield (and the two Lower Flipper Assemblies on the Upper Playfield) is mounted beneath the playfield, in conjunction with the plastic Flipper Paddle and Shaft (20-9250-5) and flipper Rubber (23-6519-4) on the upper side of the playfield. The Upper Flipper Assembly on the Upper Playfield uses a plastic Flipper Paddle and Shaft (C-11927-5) and flipper Rubber (23-6553-4).

2 The tip of the EOS Switch must travel 0.0150 (+ .010, - .000) inch, before the contacts fully open, with the flipper in the actuated position. The EOS Switch contacts must have a gap of 0.062 (± .015) inch. Adjustment of the EOS Switch must be made at a minimum distance of 0.25 inch from the switch body.

3 Flipper Assembly C-11626-L-6 (upper left flipper) uses a Flipper Coil, FL-11722.

4 All moving elements of the assembly must operate freely, with no evidence of binding.

5 The large end of the Coil Plunger Spring (item 12) must fit within the four lugs of the Solenoid Bracket.

6 For coil replacement, remove the Solenoid Bracket (item 11) to prevent screw damage.

7 Use Loctite™ 242 when reattaching screws to the Flipper Stop Assembly, the Solenoid Bracket, and the Flipper Bushing.

8 When replacing the Bumper Plug (item 14) to restore proper flipper operation, readjust the flipper paddle and shaft position.

9 Solid color blue wire connects to the banded end of each diode, mounted on the connector end of the Flipper Coil (item 9). Trace color wire connects to the unbanded end of the diode.

Upper Left Flipper Assembly
p/n C-11626-L-6

(Parts listed replace same Items of

Item	Part No.	Description
9	FL-11722	Flipper Coil (Green)
13	B-10655-L	Crank Link Assembly, L
g)	B-10657-L	Flipper Crank Assy, Left
1)	01-8073-L	Flipper Crank, Left
18	C-11627-L	Flipper Base Assy, Left

Lower Left Flipper
p/n C-11626-L-3

(Parts listed replace same Items of **C-11626-R-3**)

Item	Part No.	Description
13	B-10655-L	Crank Link Assembly, Left
g)	B-10657-L	Flipper Crank Assembly, Left
1.)	01-8073-L	Flipper Crank, Left
18	C-11627-L	Flipper Base Assy, Left

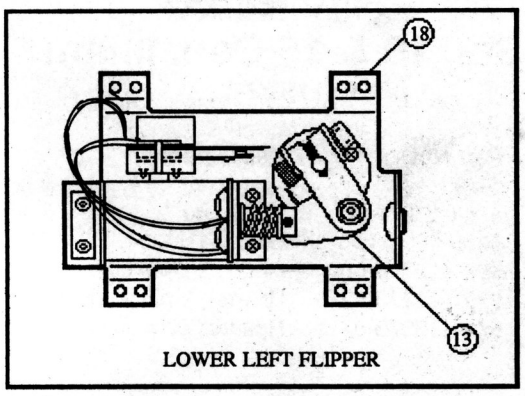

LOWER LEFT FLIPPER

Flipper Link Assembly

p/n B-10686-2

(Drawing Part Numbers Refer to **C-11626-R-3** List)

Item	Part No.	Description
13 f) 1.)	02-4219	Coil Plunger
13 f) 2.)	20-9370-1	Spring Pin, 5/32 x 7/16"
13 f) 3.)	03-8050-1	Flipper Link

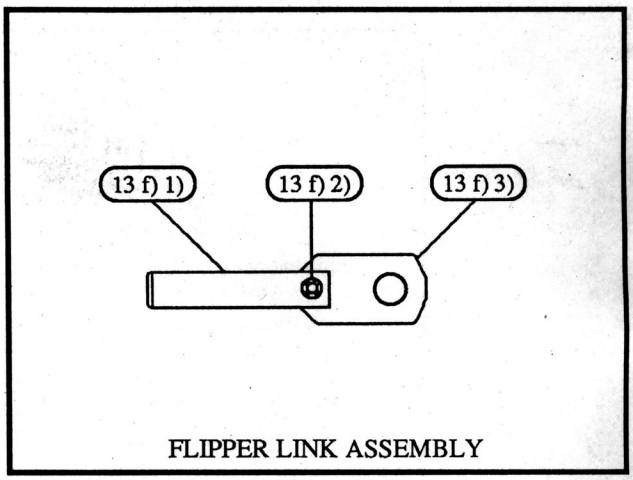

FLIPPER LINK ASSEMBLY

Knocker Assembly

p/n A-10656

Item	Part No.	Description
1	A-5387	Coil Plunger Assembly
a)	02-2653	Coil Plunger
b)	03-6013	Bell Arm Ext.
2	B-7409-2	Mtg. Bracket Assembly
3	AE-26-1200	Coil Assembly
4	01-8-508-T	Coil Retaining Bracket
5	23-6420	Rubber Grommet
6	4008-01017-06	Mach. Screw, 8/32 x 3/8
7	H-11835	Knocker Cable
8	03-7067-5	Coil Tubing

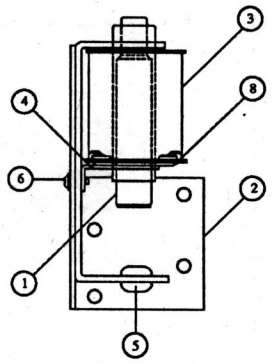

KNOCKER ASSEMBLY

Ball Trough Switches

(Viewed from underside of playfield to show locations)

Part No.	Description
B-8925	Ball Trough Switch Plate Assy
A-5844-44	Switch Wire & Bracket Assy
A-5844-45	Switch Wire & Bracket Assy
A-8643	Bracket & Mounting Plate Assy
5647-09957-00	µswitch; Cntr & L Ball Trough
4004-01003-10	Mach. Screw, 4-40 x 5/8
4005-01005-02	Mach. Screw, 5-40 x 1/8
5070-06258-00	Diode, 1N4001, 1.0A
5825-06522-00	Solder Lug-Flat, #6
RM-21-03	Insulating Tubing, #10 x 1.75
A-11680	Ball Trough Switch, Right
5647-12073-08	Submin. Switch
5070-06258-00	Diode, 1N4001, 1.0A
A-8645	Switch Wire & Bracket Assy

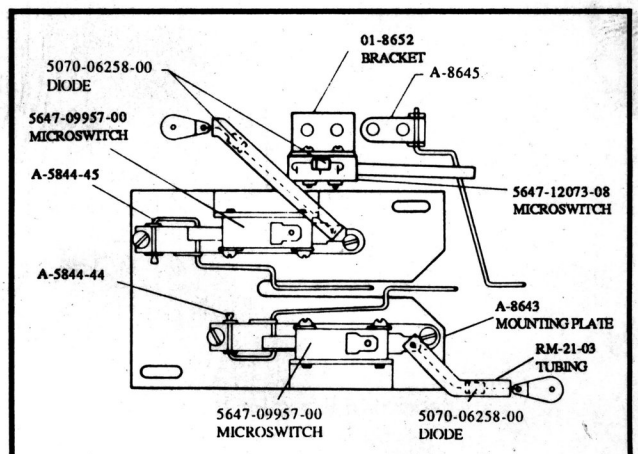

BALL TROUGH SWITCHES

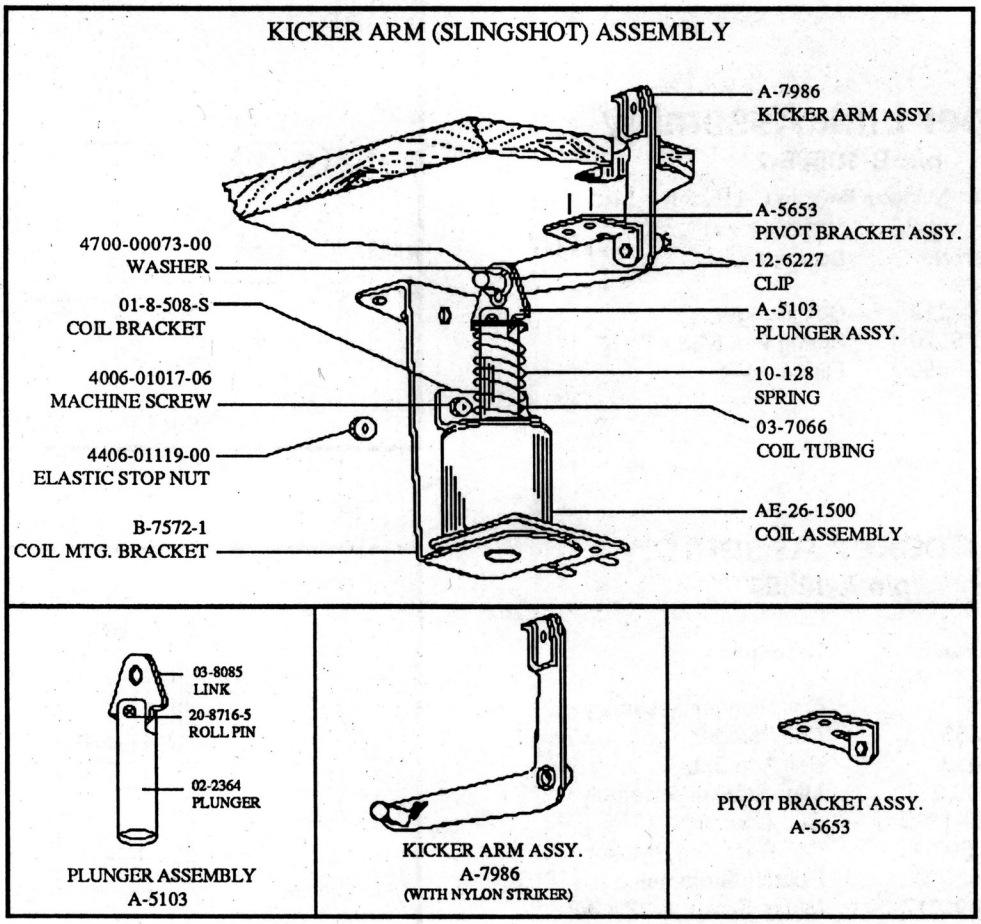

Kicker Arm ("Slingshot") Assembly

p/n B-9463

(Left & Right Kickers)

Part No.	Description
12-6227	Clip, Hairpin
A-7986	Kicker Crank Assembly
A-5103	Coil Plunger Assembly
02-2364	Coil Plunger
20-8716-5	Roll Pin, 1/8 x 7/16
03-8085	Armature Link
4700-00073-00	Flat Washer, 1/2 o.d. x 9/32 i.d. x 21 ga.
A-5653	Mounting Bracket Assy

Associated Parts for Right Kicker

Part No.	Description
B-11203-L-1	Coil & Bracket Assembly
B-7572-1	Bracket & Stop Assembly
01-8-508-S	Coil Retaining Bracket
4006-01017-06	Mach. Screw, 6-32 x 3/8
4406-01119-00	Nut, 6-32 ESN
AE-26-1500	Coil Assembly
03-7066	Coil Tubing

Associated Parts for Left Kicker

Part No.	Description
B-11203-R-1	Coil & Bracket Assembly
B-7572-1	Bracket & Stop Assembly
01-8-508-S	Coil Retaining Bracket
4006-01017-06	Mach. Screw, 6-32 x 3/8
4406-01119-00	Nut, 6-32 ESN
AE-26-1500	Coil Assembly
03-7066	Coil Tubing

Ball Shooter Lane Feeder

p/n C-9638

& Associated Parts

Item	Part No.	Description
1	12-6227	Clip, Hairpin
2	A-8247	Eject Cam Assembly
3	10-362	Ejector Spring (Plain)
4	A-6949-L	Spring Plate Assembly
5	A-8050-1	Coil Plunger Assembly
a)	02-3407-2	Coil Plunger
b)	20-8716-5	Roll Pin
c)	03-8085	Armature Link
6	4700-00030-00	Flat Washer, 17/64 x 1/2 x 15 ga
7	4700-00103-00	Flat Washer, 17/64 x 1/2 x 28 ga.
8	A-8268	Mounting Bracket Assembly

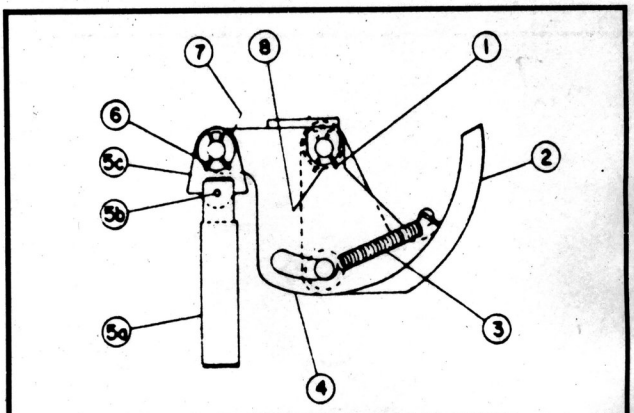

BALL SHOOTER LANE FEEDER

Associated Parts

B-9362-L-1	Coil & Bracket Assy
B-7572-1	Bracket & Stop Assy
01-8-508-S	Coil Retaining Bracket
4006-01017-06	Mach. Screw, 6-32 x 3/8
4406-01119-00	Nut, 6-32 ESN
AE-23-800	Coil Assembly
03-7066	Coil Tubing

Outhole Kicker Assembly

p/n B-8039-2

Item	Part No.	Description
1	A-6378	Mounting Plate Assembly
2	A-8335	Coil Plunger Assembly
a)	02-2364	Coil Plunger
b)	20-8716-5	Roll Pin, 1/8 x 7/16
c)	01-4251	Ball Return Link
3	03-7066	Coil Tubing
4	A-6889	Kicker Lever Assembly
5	A-8038	Coil Stop Assembly
6	AE-23-800	Coil Assembly
7	03-7176-1	Striker Ring
8	10-101-4	Spring-Reset
9	20-8712-25	"E" Ring, 1/4" Shaft
10	4006-01003-03	Mach. Screw, 6-32 x 3/16

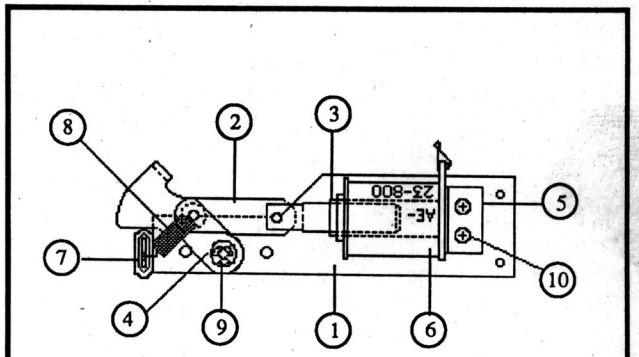

OUTHOLE KICKER ASSEMBLY

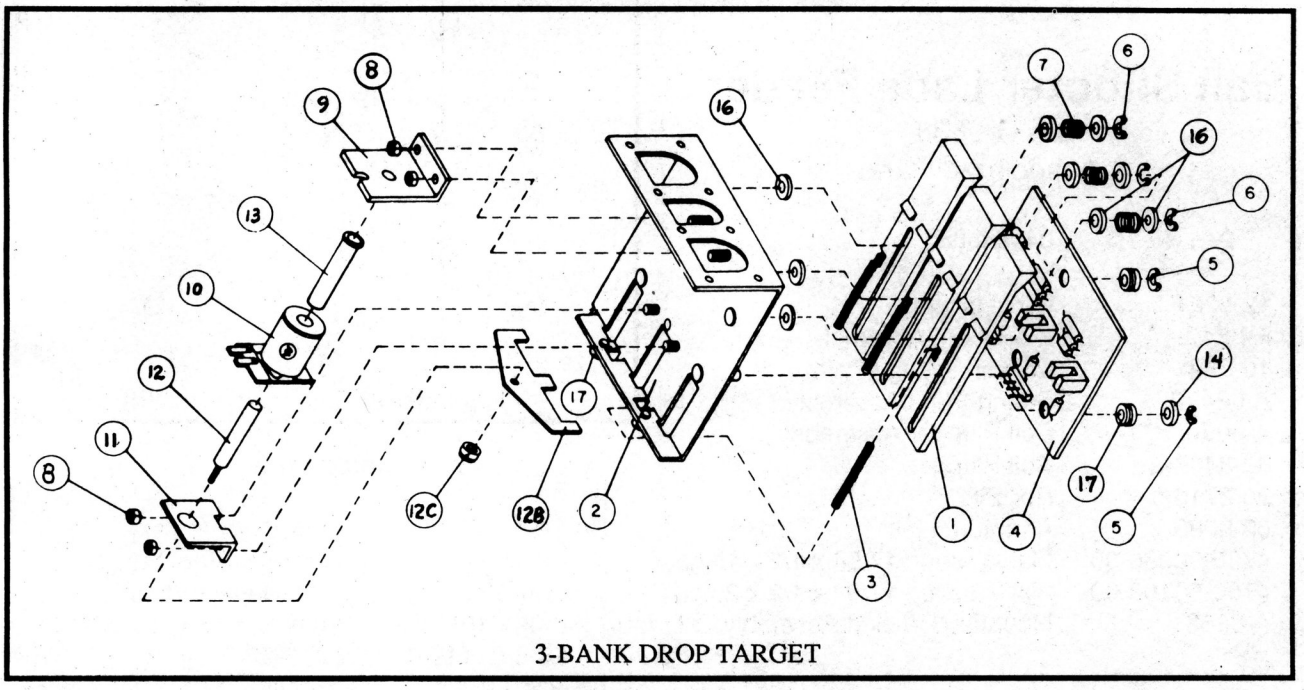

3-BANK DROP TARGET

3-Bank Drop Target

p/n C-11223-1

Item	Part No.	Description	Item	Part No.	Description
1	03-8036	Target, Plain	11	01-8413	Bracket Coil Mounting
2	B-11224	3-Bank Tgt Sub-Assy	12	A-11389	Plunger & Reset Plt Assembly
3	10-364	Spring - Extension	A)	02-3972-1	Plunger
4	C-12559	3-Drop Target Opto Assy	B)	01-8408	Reset Plate, 3-Bank
5	20-8712-18	"E" Ring, 3/16" Shaft	C)	4410-01132-00	Nut, 10-32 ESN
6	20-8712-25	"E" Ring, 1/4" Shaft	13	03-7066-4	Coil Tubing
7	10-392	Spring-Compression	14	4700-00016-00	Flat Washer, 3/16 x 7/16 x 17 ga.
8	4408-01119-00	Nut, 8-32 ESN	15	4008-01016-10	Mach. Screw, 8-32 x 5/8
9	A-11397	Stop Bracket Assembly	16	4700-00072-00	Flat Washer, 17/64 x 1/2 x 21 ga.
10	AE-26-1200	Coil Assembly	17	23-6626	Rubber Grommet

Standup Target Assemblies

(Including Diode)

Item	Part No.	Description
1	B-11696-1	Standup Target (Blue)
1	B-11696-5	Standup Target (White)
1	B-12583-6	Standup Target (Yellow)

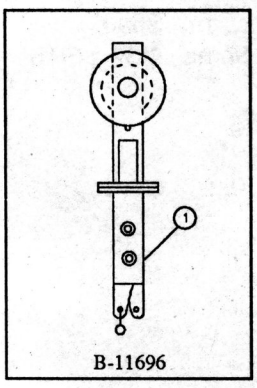

B-11696

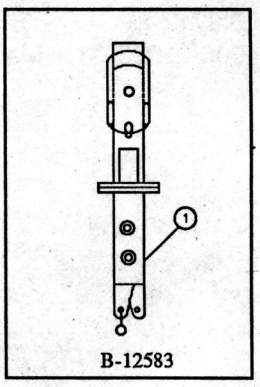

B-12583

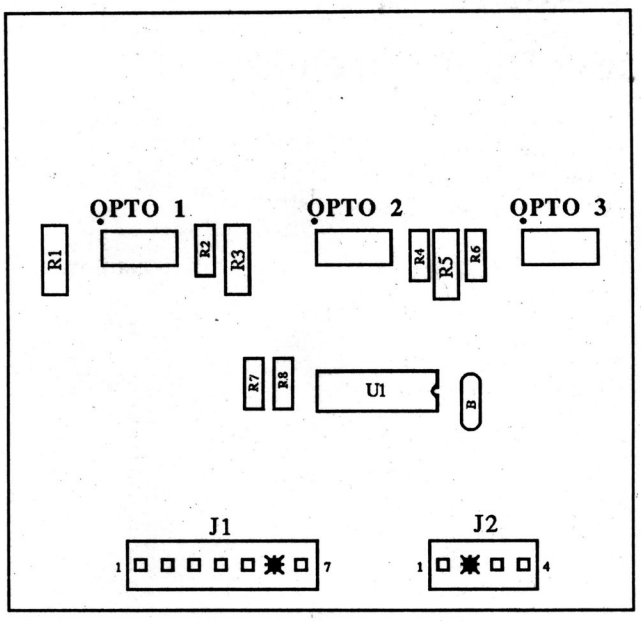

3-Bank Drop Target Opto Board

p/n C-12559

Part No.	Ckt Designation	Description
5768-12368-00		3-Bank Opto Board
5490-10159-00	Opto 1- Opto3	Opto Interruptor, MDL, S/G
5010-08930-00	R1, R3, R5	Resistor, C.F., 470 Ω, 1/2w, 5%
5010-09162-00	R8	Resistor, C.F., 100KΩ, 1/4w, 5%
5010-09324-00	R2, R4, R6	Resistor, C.F., 27KΩ, 1/4w, 5%
5010-08774-00	R7	Resistor, C.F., 22KΩ, 1/4w, 5%
5043-08980-00	B	Capacitor, .01µfd., +80 -20%
5370-12272-00	U1	I.C., Quad. Comp., LM339
5791-10871-04	J2	Connector, 4-pin Hdr, Sq Pin .156
5791-10871-07	J1	Connector, 7-pin Hdr, Sq Pin .156

3-Bank Drop Target Opto Board Schematic

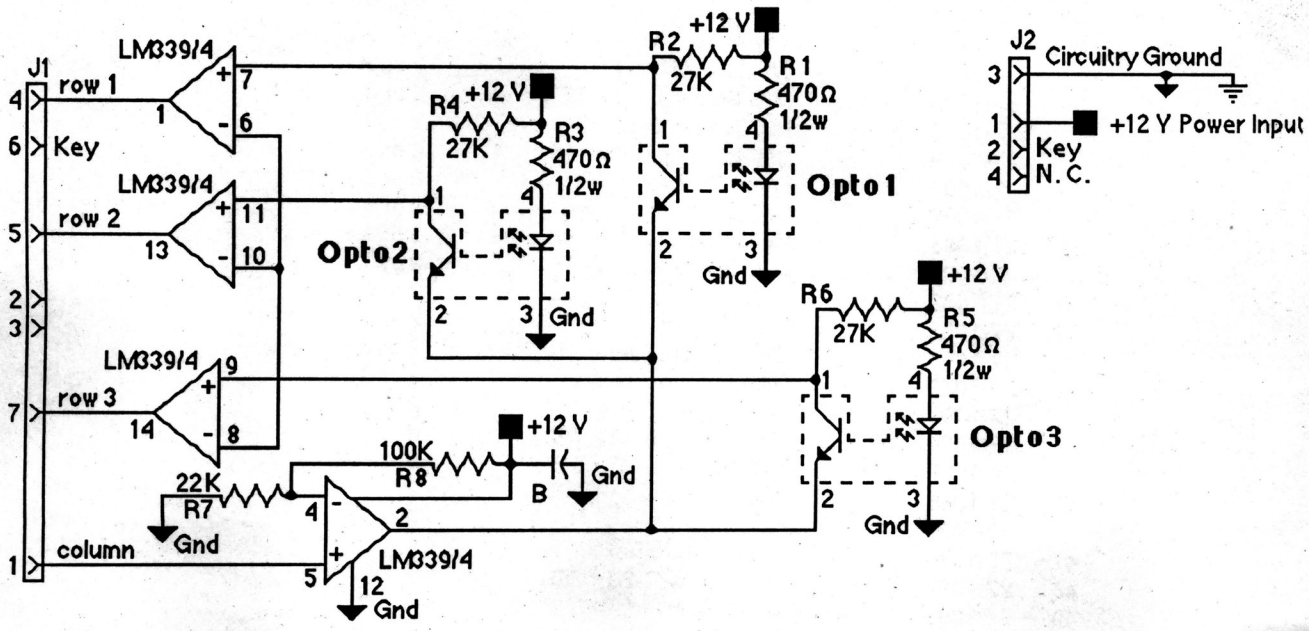

Coin Door Assembly

2-Chute Door, p/n 09-17002-x
3-Chute Door, p/n 09-17003-x
("x" is the country designator)

Item	Part No.	Description	Quantity
1	27-1038	Button Cover	2 or 3
2	27-1041-1→41	Price Panel	2 or 3
3	27-1026-1→13	Coin Entry Plate	2 or 3
4	27-1016	Lock Assembly	1
5	27-1061	Coin Return Bezel	1
6	27-1062	Coin Return Flap	1
7	27-1021	Button Housing - 2-slot	1
	27-1022	Button Housing - 3-slot	1
8	27-1111	Interlock Switch	1
9	27-1006	Coin Door - 2-slot	1
	27-1007	Coin Door - 3-slot	1
10	27-1005	Coin Door Frame	1
11	27-1003	M/C Screw, 6-32 x 3/16	4
12	27-1008	Diagnostic Switch	1
13	27-1101	M/C Screw, 4-40 x 1/4	2
14	27-1102	Bracket, Diagnostic Switch	1
15	27-1037	Button	2 or 3
16	27-1078	M/C Screw, 6-32 x 3/8	2 or 3
17	27-1039	Conical Spring	2 or 3
18	27-1079	Self-tapping Screw, #6 x 1/4	2
19	27-1077	Coinbox Cover	1
20	27-1066	Slam Switch	1
21	27-1067	M/C Screw 4-40 x 1/2	2
22	27-1017	Nut (key)	1
23	27-1012	Locking Cam	1
24	27-1011	Locking Arm	2
25	27-1020	Washer	1
26	27-1018	Star Washer	1
27	27-1019	M/C Screw	1
28	27-1089	R-Ring	1
29	27-1083	Retainer	1
30	27-1081	Coin Inlet Chute	2 or 3
31	27-1088	Wire Clamp	2 or 3
32	27-1025	Key Hook	2 or 3
33	27-1086	Washer, #6	2 or 3
34	27-1078	M/C Screw, 6-32 x 3/8	2 or 3
	27-1078	M/C Screw, 6-32 x 7/8	2 or 3
35	27-1079	Self-tapping Screw, #6 x 1/4	2 or 3
36	27-1084	Lamp Socket	2 or 3
	27-1085	Lamp	2 or 3
37	27-1096	Self-tapping Screw, #5 x 3/8	2 or 3
38	27-1087	M/C Screw, 6-32 x 5/8	2 or 3
39	27-1082	Lever Arm	2 or 3
40	27-1097	Switch Cover	2 or 3
41	27-1091	Coin Accept Chute	2 or 3
42	27-1075	Wire Form	2 or 3
	27-1093	Wire Form	2 or 3
43	27-1094	M/C Screw, 6-40 x 7/8	2
44	27-1087	M/C Screw, 6-32 x 5/8	2
45	27-1086	Washer, #6	2
46	27-1095	Nut, 4-40	2
47	27-1076	Coin Return Box	1
48	27-1078	M/C Screw, 6-32 x 3/8	2
49	27-1092	Microswitch	2 or 3

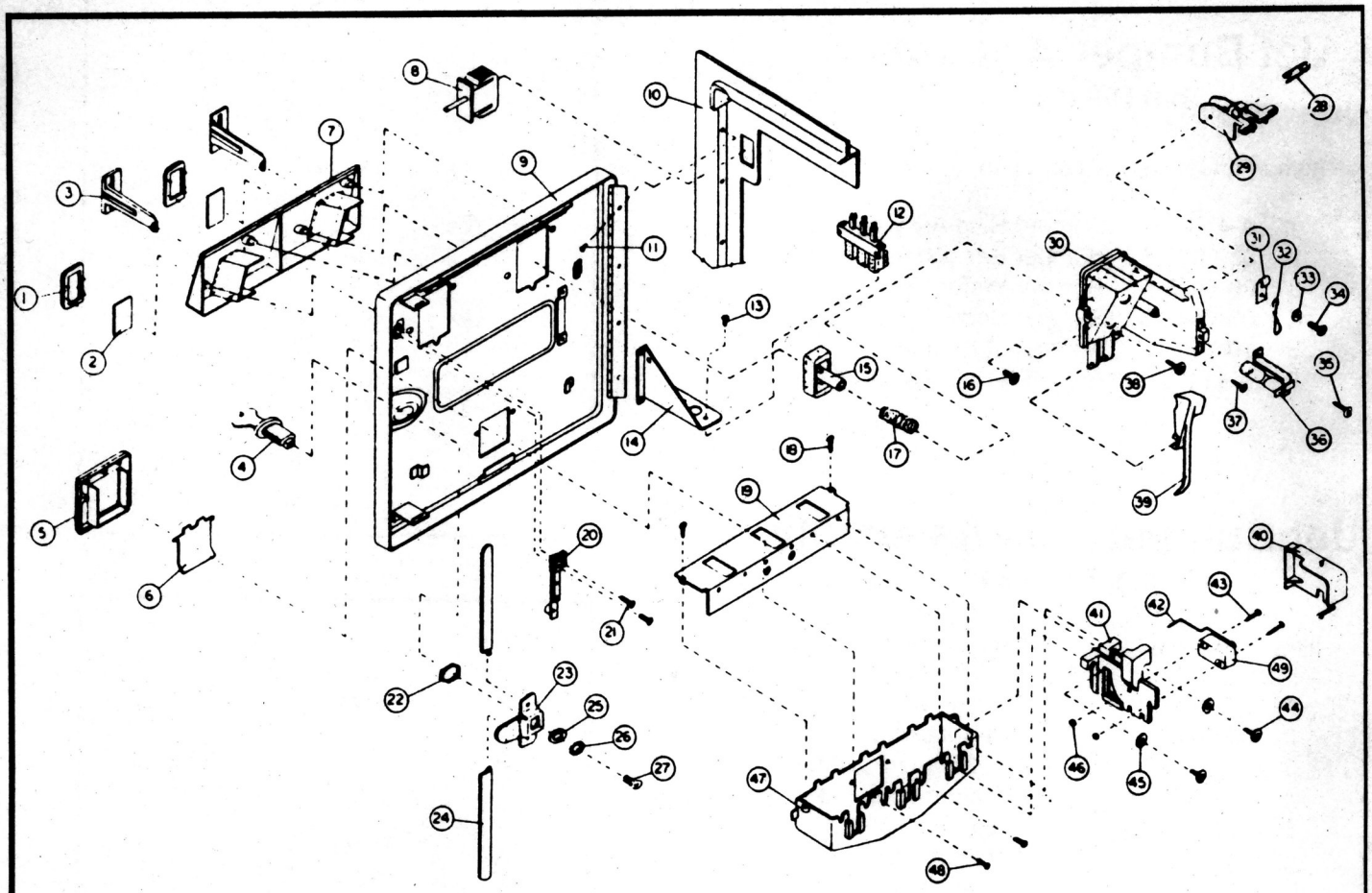

COIN DOOR ASSEMBLY

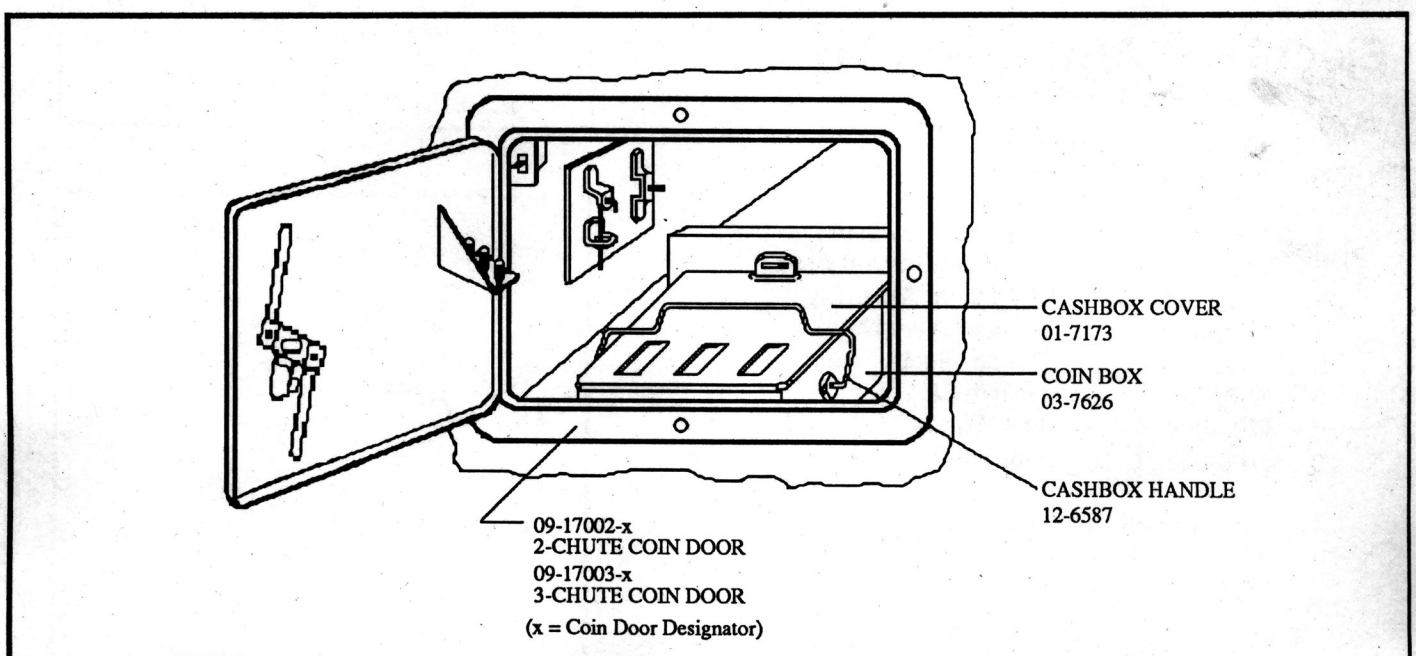

PINBALL FRONT BOX

Jet Bumper Assembly
p/n B-9414

Item	Part No.	Description
1	A-4754	Bumper Ring Assy
2	03-6009-A5	Bumper Base-Wht
3	03-6035-5	Bumper Wafer-Wht
4	03-7443-5	Bumper Body-Wht
5	10-7	Spring-Jet Bumper
6	A-11199	Socket & Bulb Assy

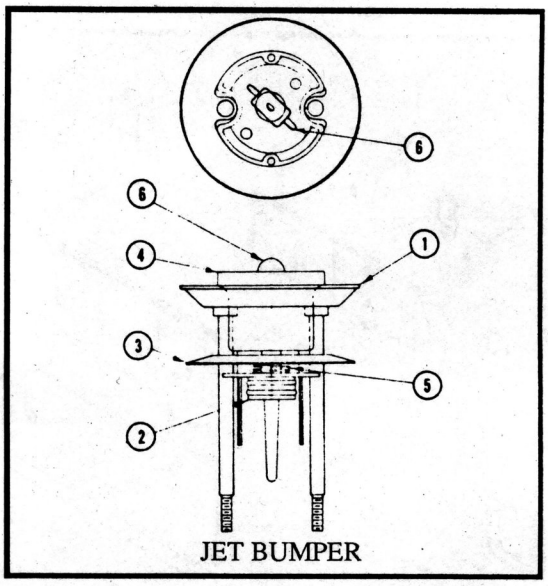

JET BUMPER

Jet Bumper Coil Assembly
p/n B-9415-1

Item	Part No.	Description
1	B-7417	Bracket & Stop Assy
2	01-1747	Coil Retaining Bracket
3	01-5492	Armature Link, Steel
4	01-5493	Armature Link, Bakelite
5	02-3406-1	Coil Plunger
6	10-326	Armature Spring
7	AE-23-800	Coil Assembly
8	4006-01017-04	Mach. Screw, 6-32 x 1/4
9	03-7066	Coil Tubing

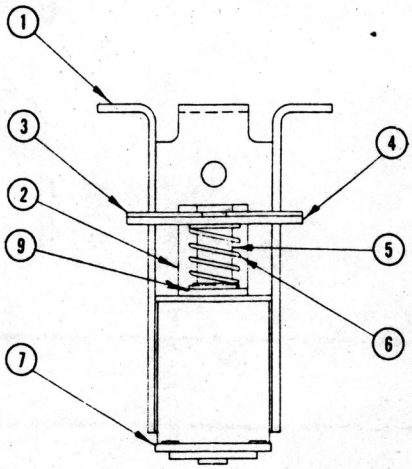

JET BUMPER COIL ASSEMBLY

Eject Hole Arm Assembly
p/n B-9361-R

Item	Part No.	Description
1	A-6949-R	Spring Plate Assy
2	A-6950-R	Mounting Bracket Assy
3	A-7471-R	Eject Cam Assembly
4	A-8050	Plunger Assembly
5	10-362	Spring-Eject (Plain)
6	12-6227	Hairpin Clip
7	4700-00030-00	Flat Washer, 17/64 x 1/2 x 15ga.
8	4700-00103-00	Flat Washer, 17/64 x 1/2 x 28ga.

Associated Parts For Eject Hole

B-11203-L-1	Coil & Bracket Assembly
B-7572-1	Bracket & Stop Assembly
01-8-508-S	Coil Retaining Bracket
4006-01017-06	Mach. Screw, 6-32 x 3/8
4406-01119-00	Nut, 6-32 ESN
AE-26-1500	Coil Assembly
03-7066	Coil Tubing

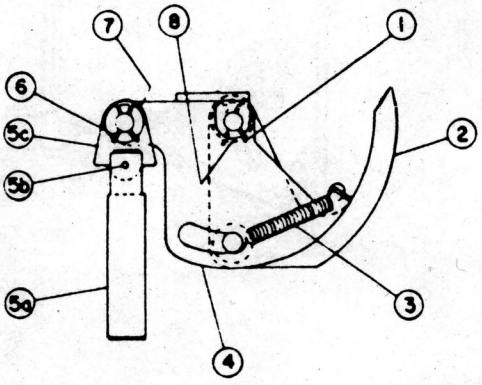

EJECT HOLE ARM ASSEMBLY

Top Ball Popper Assembly
p/n D-11335-2

Item	Part No.	Description
1	03-8053	Ball Popper Cap
2	16-8850-200	I.D. Popper Label
3	20-9314-7	Dowel Pin, 3/32" x 1/2"
4	AE-23-800	Coil Assembly
5	A-11721	Bracket Assembly
6	10-135	Spring Coil Plunger
7	A-11336	Armature Assembly
8	23-6420	Rubber Grommet
9	4008-01017-05	Mach. Screw, 8-32 x 5/16
10	B-11631	Ball Popper Bracket Sub-Assy
11	03-7067	Coil Tubing
12	A-11658	Switch & Diode Assembly

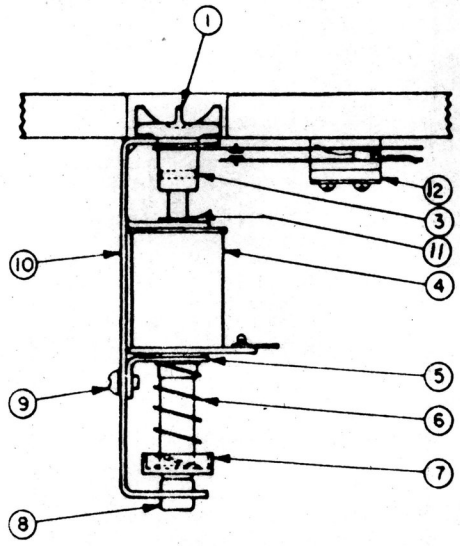

TOP BALL POPPER ASSEMBLY

Bottom Ball Popper Assembly
p/n D-12642

Item	Part No.	Description
1	4008-01016-08	Mach. Screw, 8-32 x 1/2
2	B-12505	Ball Popper Ext. Bracket Assy
3	4408-01119-00	Nut, 8-32 ESN
4	D-11335-2	Ball Popper Assembly
a)	B-11631	Ball Popper Bracket Sub-Assy
b)	A-11336	Armature Assembly
c)	03-8053	Ball Popper Cap
d)	20-9314-7	Dowel Pin, 3/32 x 1/2
e)	A-11721	Bracket Assembly
f)	AE-23-800	Coil Assembly
g)	23-6420	Rubber Grommet
h)	10-135	Spring Coil Plunger
i)	4008-01017-05	Mach. Screw, 8-32 x 5/16
j)	03-7067	Coil Tubing
k)	16-8850-200	I.D. Popper Label
5	06-82	Insulator
6	01-3670-1	Switch Plate
7	4005-01051-10	Mach. Screw, 5-40 x 5/8
8	A-11658	Switch & Diode Assembly

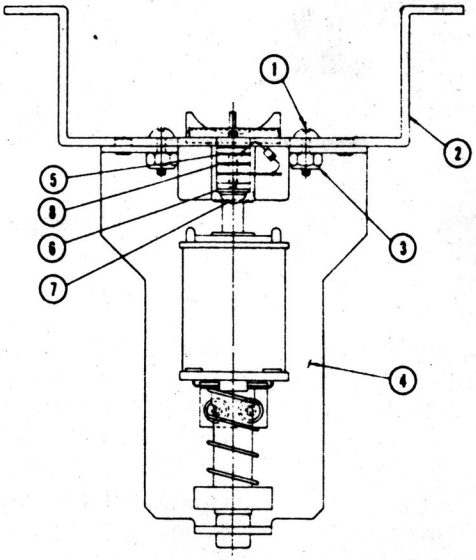

BOTTOM BALL POPPER ASSEMBLY

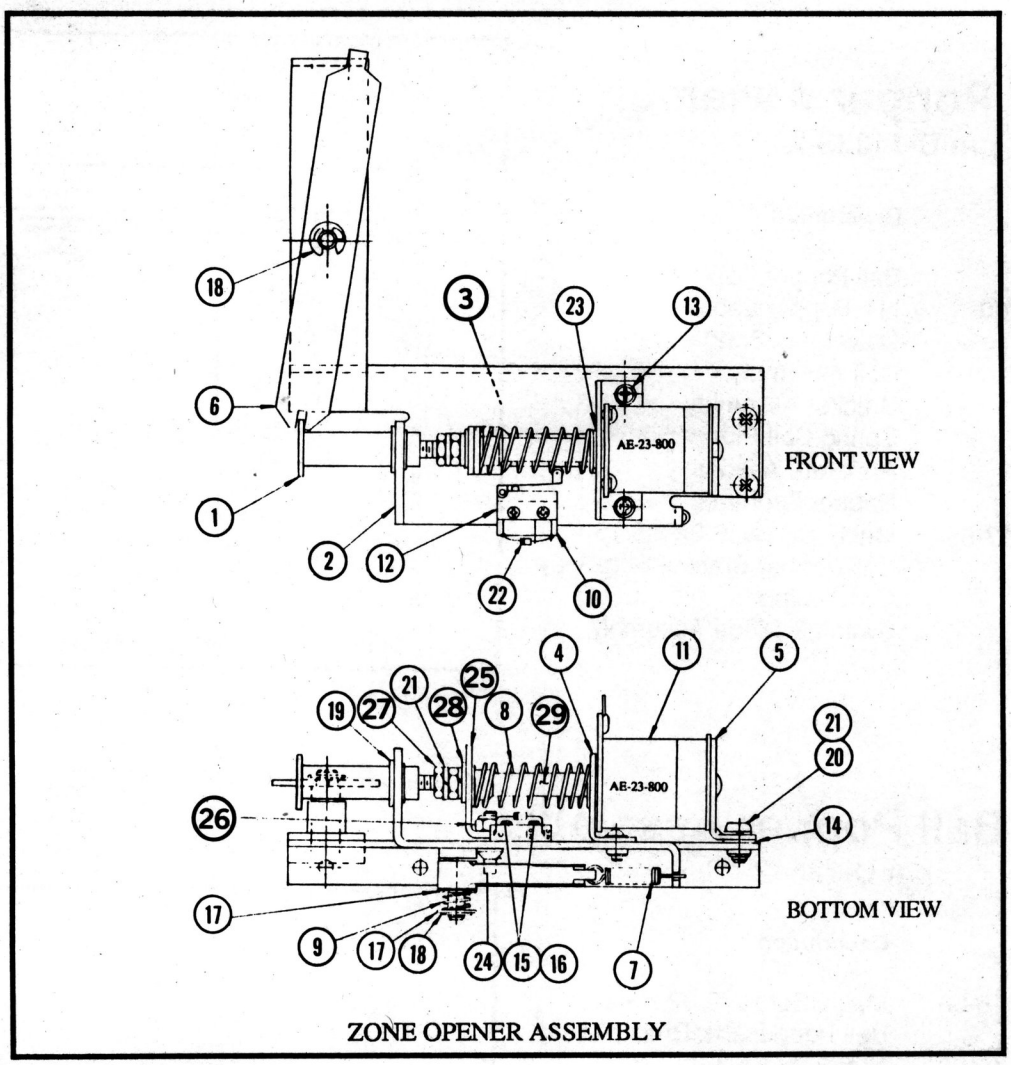

ZONE OPENER ASSEMBLY

Zone Opener Assembly

p/n C-12429

Item	Part No.	Description
1	02-4351	Shaft-Zone Opener
2	C-12428	Main Frame Assy
3	03-8090	Flat Cam
4	01-8639	Coil Support Bracket
5	A-10821	Flipper Stop Bracket Assy
6	A-12431	Actuator Assembly
7	10-401	Spring, Extension
8	10-406	Spring, Compression
9	10-392	Spring, Compression
10	01-8600	Switch Insulator
11	AE-23-800	Coil Sub-Assembly
12	5647-12073-06	Mini Misro-Switch w/Roller
13	4006-01027-06	Mach. Screw, #6-32 x 3/8
14	4700-00021-00	Flatwasher, 13/64x7/16x21ga.
15	4701-00024-00	Lock Washer, #2 Split
16	4002-01005-06	Mach. Screw, 2-56 x 3/8
17	4700-00103-00	Flatwasher, 17/64x1/2x28ga.
18	20-8712-25	"E"-Ring, 1/4" Shaft
19	20-8790-13	Nylined Bearing
20	4010-01008-06	Mach. Screw, 10-32 x 3/8
21	4701-00004-00	Lock Washer, #10 Split
22	5070-06258-00	Diode, 1N4001, 1.0A.
23	03-7066	Coil Tubing
24	02-4304	Cam Pivot Pin
25	01-8640	Pin Mounting Bracket
26	4408-01119-00	Nut, 8-32 ESN
27	4410-01130-00	Nut, 10-32 Hex. Nut
28	4700-00060-00	Flat Washer, 7/32x1/2x16ga.
29	02-4302	Threaded Plunger

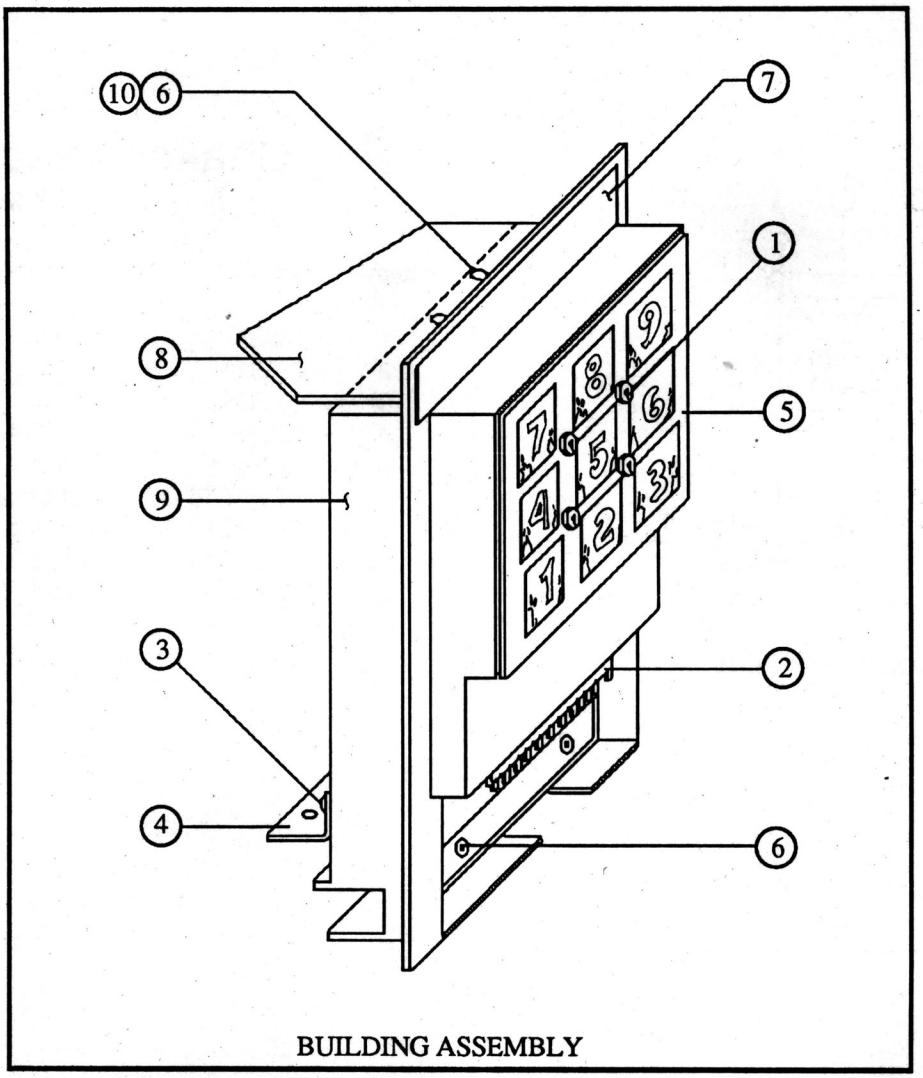

BUILDING ASSEMBLY

Building Assembly

p/n B-12728

Item	Part No.	Description
1	4106-01032-06	Sh Metal Screw, #6 x 3/8
2	C-12427	Building Lamp Matrix
3	07-6688-18	Rivet, 1/8 x 3/16
4	01-9171	Bracket
5	31-1006-568-2	Window, Playfield Plastic
6	4700-00003-00	Flatwasher, 1/8 x 9/32 x 21ga.
7	31-1006-568-4	Building Decal
8	03-8274	Guard
9	03-8218	Building
10	07-6688-20	Rivet, 1/8 x 1/4

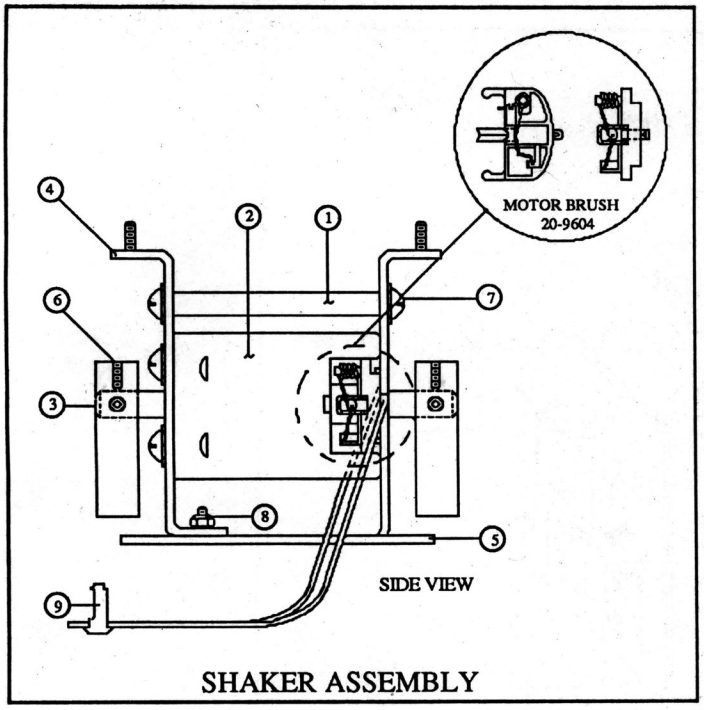

SHAKER ASSEMBLY

Shaker Assembly
p/n B-12388

Item	Part No.	Description
1	02-4353	Spacer
2	14-7951	Motor 11 R.P.M.
3	20-9588	Eccentric Weight
4	A-12565	Front Mounting Bracket Assy
5	B-12389	Motor Mounting Bracket Assy
6	4008-01076-06	Set Screw, 8-32 x 3/8 Hex.
7	4008-01017-06	Mach. Screw, 8-32 x 3/8
8	4408-01119-00	Nut, 8-32 E.S.N.A.
9	H-12541	Shaker Motor Cable

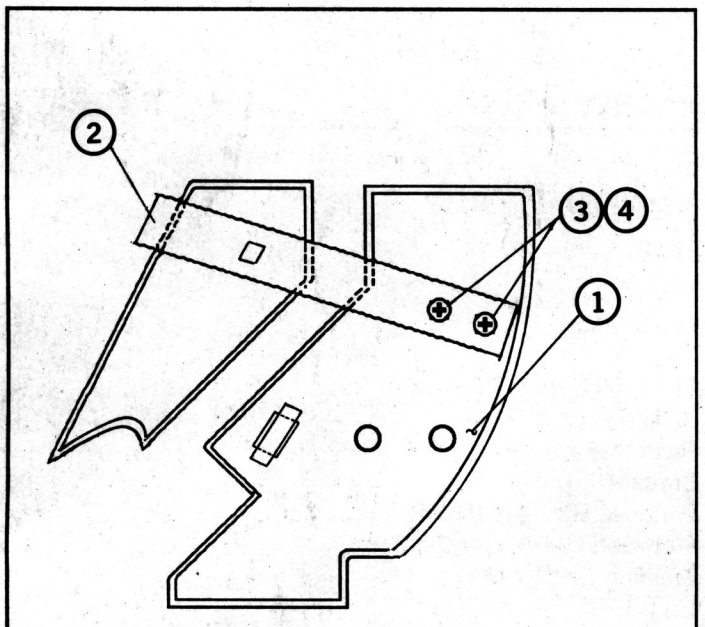
STATE ASSEMBLY

State Assembly
p/n C-12433

Item	Part No.	Description
1	01-8985	Slide
2	03-8226	Shifting State
3	4108-01004-06	Sh. Metal Screw, #8 x 3/8
4	4701-00003-00	Lockwasher, #8 Split

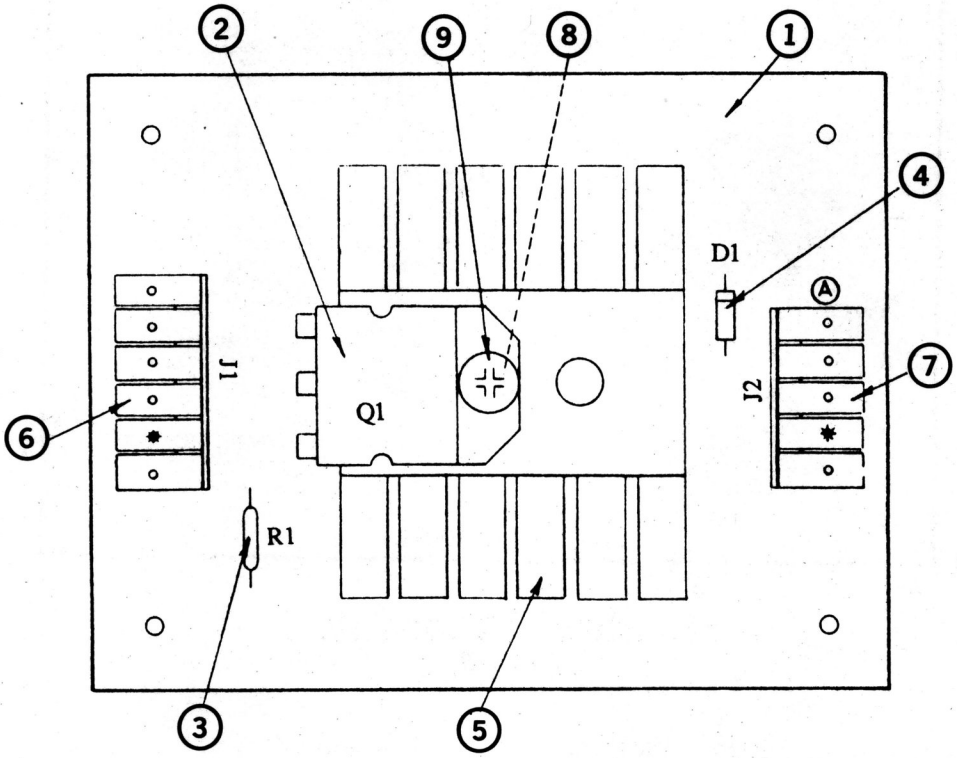

High Current Driver

p/n C-12493

Item	Part No.	Ckt Designator	Description
1	5768-12372-00		High Current Driver P.C.B.
2	5191-12179-00	Q1	Transistor, TIP36C
3	5010-09160-00	R1	Resistor, 220Ω, 1/4w, 5%
4	5070-09054-00	D1	Diode, 1N4004, 1.0A
5	5705-09172-00		Heatsink, 6072B
6	5791-10862-06	J1	Connector, 6-pin Hdr Sq Pin .156
7	5791-10862-05	J2	Connector, 5-pin Hdr Sq Pin .156
8	4406-01128-00		Nut, 6-32 KEPS
9	4006-01017-08		Mach. Screw, 6-32 x 1/2

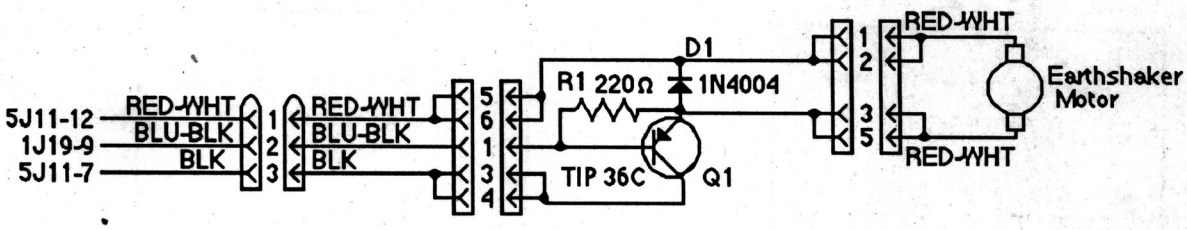

High Current Driver Circuit Schematic

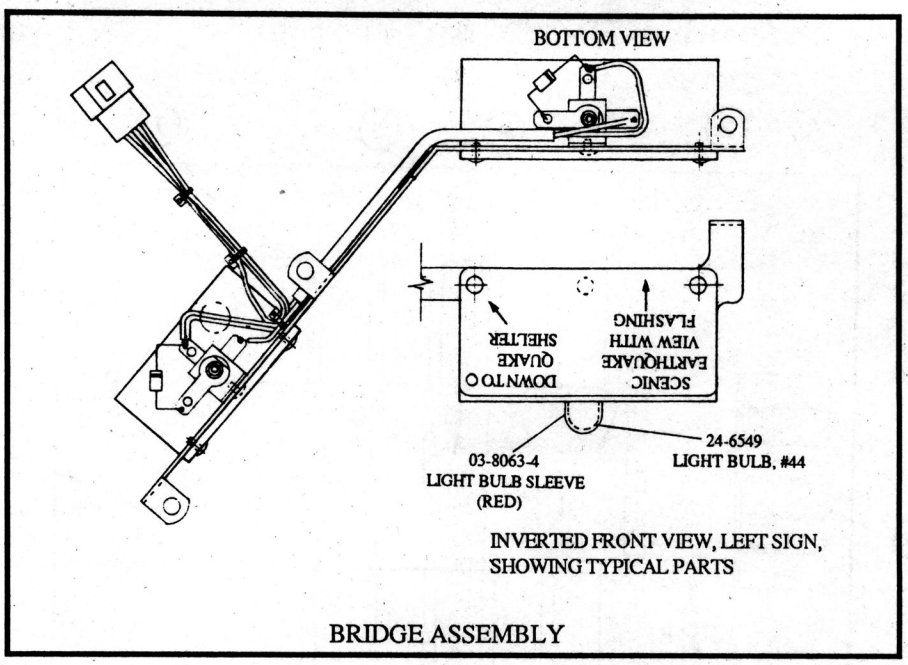

BRIDGE ASSEMBLY

Bridge Assembly

p/n C-12584

Item	Part No.	Description
1	01-9092	Bridge Bracket
2	A-8882	Light Socket Assy w/Diode
a)	A-8882-1	Socket, #44 Bulb
b)	5070-06258-00	Diode, 1N4001, 1.0A
3	31-1006-568-25	Playfield Plastic
4	31-1006-568-26	Playfield Plastic
5	07-6688-17N	Rivet, 5/32"
6	07-6688-18N	Rivet, 3/16"
7	03-7520-2	Nylon Ty-Wrap
8	H-12545	Road Sign Cable
9	03-8063-4	Bulb Sleeve (Red)

Mini-Post

p/n 03-8044-9

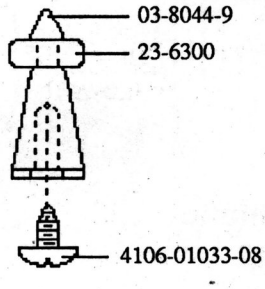

MINI POST (RED)

Microswitch Mounting Bracket

p/n 01-8719

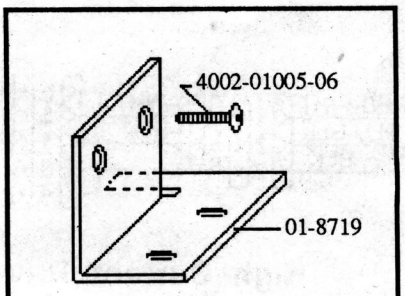

MICROSWITCH
MOUNTING BRACKET

Center Ramp Assembly
p/n R-12487

Part No.	Description	Part No.	Description
A-12238	Sub-Mini Switch Assembly	07-6688-18N	Rivet, 1/8 x 3/16
A-12239	Sub-Mini Switch Assembly	07-6688-19N	Rivet, 1/8 x 7/32
A-12558	Switch Gate Assembly	23-6535	Rubber Grommet
B-12156	Single Flash Lamp Assembly	31-1485-568-1	Center Ramp, Decal
H-12543	Ramp Cable, Left	31-1485-568-2	Center Ramp, Decal
01-8774	Switch Bracket	4002-01005-06	Mach. Screw, 2-56 x 3/8
01-8795	Ramp Flap	4006-01027-06	Mach. Screw, 6-32 x 3/8
03-6047-4	Spacer, 5/16"	4106-01004-08	Sh Metal Screw, #6 x 1/2
03-7520-2	Nylon, Ty-Wrap	4106-01004-10	Sh Metal Screw, #6 x 5/8
03-8044-9	Mini-Post (Red)	4106-01004-12	Sh Metal Screw, #6 x 3/4
03-8149-9	Mini Dome (Red)	4406-01128-00	Nut, 6-32 KEPS
03-8214	Center Ramp	4700-00003-00	Flat Washer, 1/8 x 9/32 x 21ga.
07-6688-17N	Rivet-Nickel Plate	4701-00024-00	Lockwasher, #2 Split

Right Ramp Assembly
p/n D-12489

Part No.	Description	Part No.	Description
A-12239	Sub-Mini Switch Assembly	07-6688-17N	Rivet-Nickel Plate
A-12506	Switch Gate Assembly	07-6688-19N	Rivet, 1/8 x 7/32
B-12156	Single Flash Lamp Assembly	31-1485-568-4	Right Ramp, Decal
H-12544	Ramp Cable, Right	4002-01005-06	Mach. Screw, 2-56 x 3/8
01-8710	Ramp Flap	4006-01027-06	Mach. Screw, 6-32 x 3/8
01-8774	Switch Bracket	4106-01004-08	Sh Metal Screw, #6 x 1/2
03-8149-9	Mini Dome (Red)	4406-01128-00	Nut, 6-32 KEPS
03-8149-10	Mini Dome (Blue)	4700-00003-00	Flat Washer, 1/8 x 9/32 x 21ga.
03-8149-13	Mini Dome (Clear)	4701-00024-00	Lockwasher, #2 Split
03-8213	Right Ramp		

Spiral Ramp Assembly
p/n D-12364

Part No.	Description	Part No.	Description
01-8997	Ramp Flap	07-6688-19A	Rivet, 1/8 x 7/32, Chrome
03-8211	Spiral Ramp-Base	31-1485-568-5	Spiral Ramp, Decal
03-8212	Spiral Ramp-Top	31-1485-568-6	Spiral Ramp Base, Decal
07-6688-17N	Rivet-Nickel Plate	4700-00003-00	Flat Washer, 1/8 x 9/32 x 21ga.

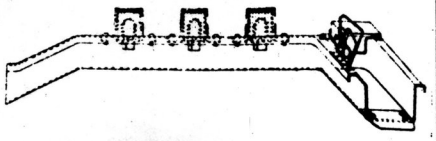

RIGHT RAMP ASSEMBLY
D-12489

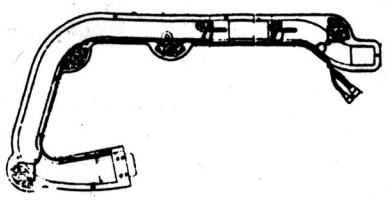

CENTER RAMP ASSEMBLY
R-12487

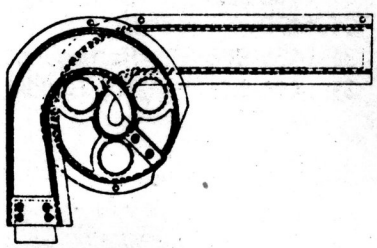

SPIRAL RAMP ASSEMBLY
D-12364

Backbox Parts List

Item	Part No.	Description
1	01-6645	Venting Screen
2	B-10686-1*	Knocker & Bracket Assy
3	A-12497	Upr Insert Bd Hinge Assy
4	D-12184-1	P.C.B Plate Assy
5	A-12498	Lwr Insert Bd Hinge Assy
6	D-11883-568*	System 11B CPU Board
7	01-8569	Lwr Spkr Panel Bracket
8	5100-09418-00	Bridge Rectifier, 100v,35A
9	5040-09051-00	Capacitor, 30,000 µFd, 25v
10	A-11-888	*EARTHSHAKER*, Backbox
11	D-12247-568*	Aux. Pwr Driver Board
12	01-9047	Insert Stop Bracket
13	D-12246*	Power Supply Assembly
14	20-9549	Cam Lock, 3/4"D x 27/32"L
15	D-11581-568*	Audio Board Assembly
16	D-12313-568*	Backbox Interconnect Board
17	D-12518	Display/Speaker Panel Assy
a)	31-1420-568	Cover, Displ/Spkr Panel Assy
b)	31-1422-554	Speaker Grill
c)	D-12232-1*	Master Display PC Board Assy
d)	D-12501	7-Lamp Speaker Panel Assy
e)	5555-12015-00	Speaker 4Ω, 6" Rad., 10w
f)	5555-12068-00	Speaker 4" Piezo, 50w

* Refer to Individual Unit's Parts List

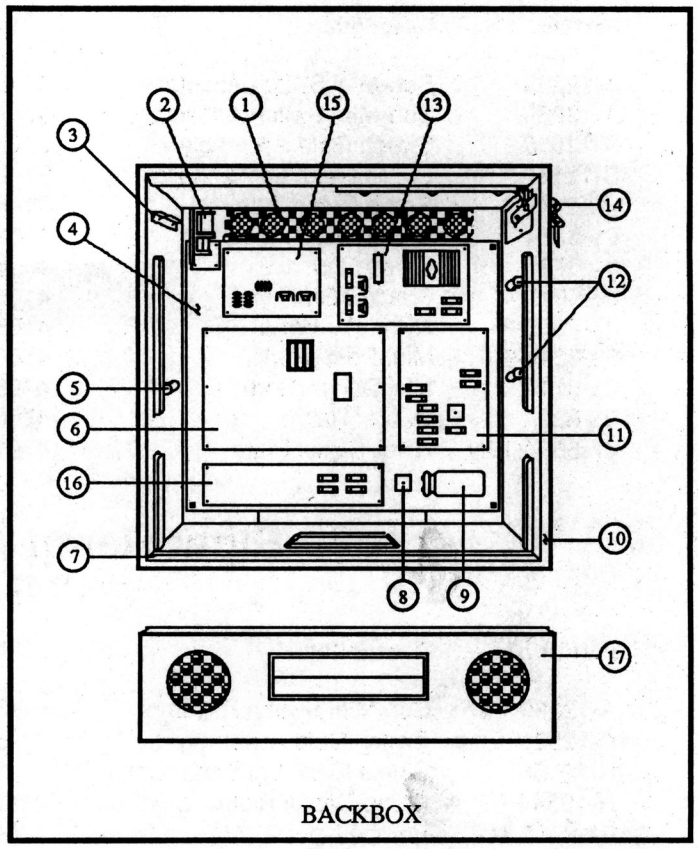

BACKBOX

Miscellaneous *EARTHSHAKER* Parts

A-8552-568	Backglass Assy
31-1357-568	Backglass, *EARTHSHAKER*
03-7960-568	Playfield Mylar
08-7028-T	Glass-Playfield
20-9347	Toggle Latch
20-9518	Backbox Hinge
31-1463-568	Drop Target Decal Set
31-1470	Start Button Decal
31-1485-568	Ramp Decal Set
31-1486-568	Top Building Decal

567-IN	*EARTHSHAKER* , Insert
01-6571	Hinge Mtg Bracket, Insert Board
01-6655	Latch-Insert Board
01-6652	Stop Bracket
31-1006-568	Plastics Set, *EARTHSHAKER*
31-1008-568	Bottom Arch (Screened)
31-1009-568	Shooter Plate (Screened)
5795-10937-09	Ribbon Cable, 20-Conductor, 9"
5795-10938-27	Ribbon Cable, 26-Conductor,27"

Solenoids/Flashers

Item	Part No.	Description
01A	AE-23-800	Outhole Kicker
01C	#89 Flashlamp	Captive Ball Flasher
02A	AE-23-800	Ball Shooter Lane Feeder
02C	#89 /906 Flashlamps	Cntr Ramp 1 & Bldg Flashers
03A	AE-26-1200	3-Bank Drop Target Reset
03C	#89 /906 Flashlamps	Cntr Ramp 2 & Spinner Flashers
04A	AE-23-800	California Fault
04C	#906 Flashlamp	Cntr Ramp 3 Flasher
05A	AE-26-1500	Eject Hole
05C	#906 Flashlamp	Cntr Ramp 4 Flasher
06A	AE-24-900	Bottom Ball Popper
06C	#906 Flashlamp	Right Ramp 1 Flasher
07A	AE-23-800	Knocker/Ticket Dispenser (b)
07C	#89/906 Flashlamps	Right Ramp 2 Flasher
08A	Not Used	
08C	#906 Flashlamp	Right Ramp 3 Flasher
09	5580-12145-01	Building Motor Relay
	14-7941-1	Building Motor
10	5580-12145-01	High P'field Gen Illumin Relay *
11	5580-12145-01	Insert Bd Gen Illumin Relay *
12	5580-09555-01	Solenoid A/C Select Relay**
13	AE-23-800	Top Ball Popper
14	#906 Flashlamps	Jackpot / Sun Flashers
15	5580-12145-01	Low P'field Gen Illumin Relay *
16	#89/906 Flashlamps	On Ramp & J Bumper Flashers
17	AE-23-800	Left Jet Bumper
18	AE-26-1500	Left Kicker ("Sling")
19	AE-23-800	Right Jet Bumper
20	AE-26-1500	Right Kicker ("Sling")
21	AE-23-800	Lower Jet Bumper
22	Not Used	
-	FL 11630/50VDC	Lower Left and Right Flipper
-	FL 11722/50VDC	Upper Left Flipper

* - On Relay Board, C-11998-1, on Playfield and Insert Board
** - In backbox on Aux Power Driver Bd, D-12247

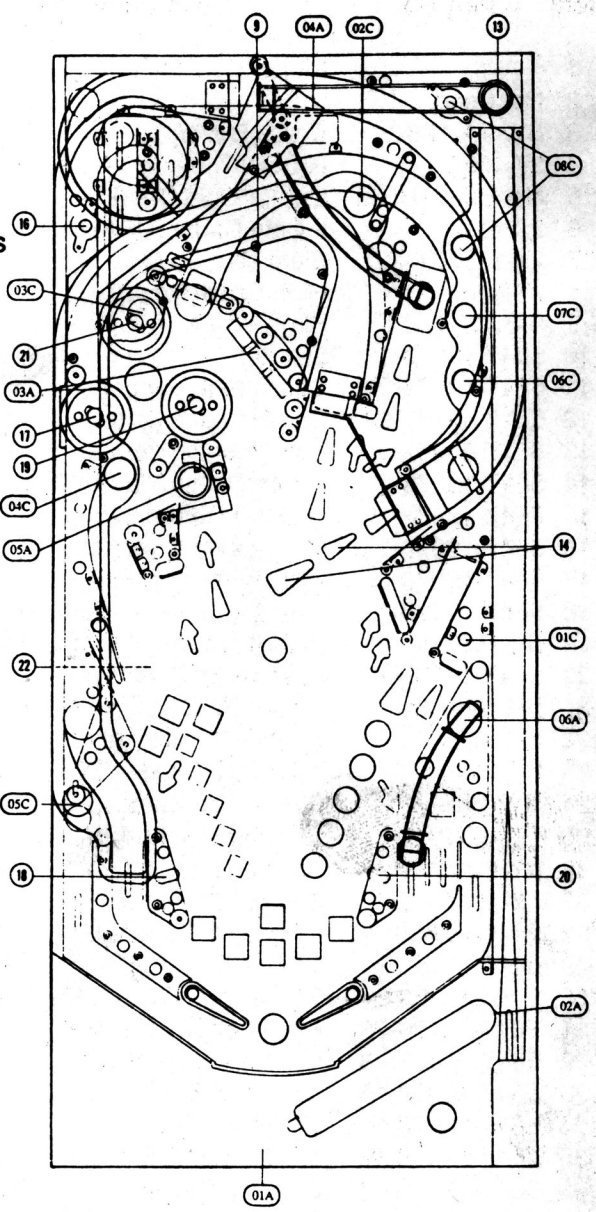

Rubber Parts

Item	Part No.	Description	Qty	Item	Part No.	Description	Qty
A	23-6300	5/16" Ring	10	J	23-6519-4	Lg Red Flipper Ring	3
B	23-6301	3/4" Ring	3	K	23-6535	Bumper	7
C	23-6303	1-1/4" Ring	1	L	23-6552	Sleeving, Yellow	3
D	23-6305	2" Ring	4	M	23-6556	Sleeving, Black	7
E	23-6306	2-1/2" Ring	2	N	23-6579-1	Bumper, Tapered, Wh	1
F	23-6307	3" Ring	2	P	23-6626	Grommet	3
G	23-6313-1	Grommet	1				
H	23-6327	Ball Shooter Tip	1				

Switches

Item	Part No.	Description
1		Plumb Bob Tilt
2	Not Used	
3	SW-1A-126	Credit Button
4	27-1092	R Coin Chute (USA)
5	Not Used (USA)	Center Coin Chute
6	27-1092	L Coin Chute (USA)
7	27-1066	Slam Tilt
8	27-1008	High Score Reset*
9	B-8306-1	Playfield Tilt
10	5647-12133-12	Outhole
11	5647-12073-08	Ball Trough 1 (right)
12	5647-09957-00	Ball Trough 2 (left)
13	5647-09957-00	Ball Trough 3 (left)
14	5647-12073-19	R Inner Return Lane (Zone 7)
15	5647-12073-19	R Outer Return Lane
16	5647-12073-19	Right Outlane (drain)
17	5647-12073-19	Left Outlane (drain)
18	5647-12073-19	Left Return Lane (Zone 8)
19	B-11696-1	Left Standup Tgt (Zone 1)
20	5647-12133-11	Eject Hole (Zone 5)
21	B-11696-1	R ight Standup Tgt (Zone 2)
22	B-11696-1	R ight Standup Tgt (Zone 3)
23	B-11696-5	Cptv Ball Standup Tgt (Zone 9)
24	B-11696-5	50K (R Wh Standup Tgt)
25	p/o C-12406	Building Height 1 **2
26	p/o C-12406	Building Height 2 **2
27	p/o C-12559	3-Bank Dr Tgt (left) **3
28	p/o C-12559	3-Bank Dr Tgt (mid) **3
29	p/o C-12559	3-Bank Dr Tgt (right) **3
30	B-12583-6	Center Standup Tgt (Zone 4)
31	5647-12133-08	Right Loop (Zone 6)
32	5647-12133-08	Left Loop (Zone 6)
33	5647-12073-19	On Ramp 50K
34	5647-12073-19	On Ramp 25K
35	5647-12073-19	On Ramp 100K
36	5647-12073-19	On Ramp Bypass
37	A-11658	Top Ball Popper
38	5647-12073-13	Drop Hole 1 (under p'fld)
39	5647-12073-21	Drop Hole 2 (under p'fld)
40	A-11658	Bottom Ball Popper
41	5647-12133-08	Spinner
42	5647-12073-06	Fault Open
43	5647-12073-11	Right Ramp Entry
44	5647-12073-11	Center Ramp Entry
45	5647-12073-13	Center Ramp Middle
46	5647-12073-13	Center Ramp End
47	Not Used	
48	Not Used	
49	Not Used	
50	5647-12073-04	Ball Shooter Lane
51	Not Used	
52	B-12030-2	Left Jet Bumper
53	B-12030-2	Right Jet Bumper
54	B-12030-2	Top Jet Bumper
55		Left Kicker***
56		Right Kicker***
57		R Flipper Lane Change**1
58		L Flipper Lane Change**1
59	Not Used	
60	Not Used	
61	Not Used	
62	Not Used	
63	Not Used	
64	Not Used	

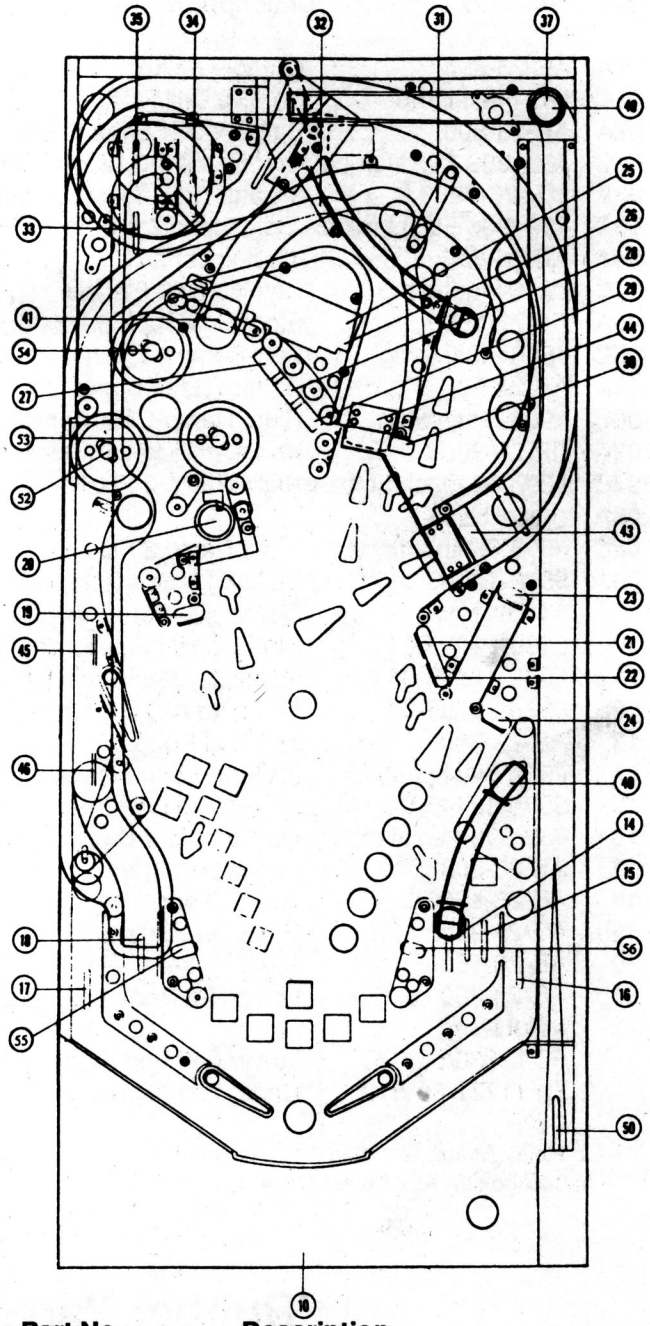

- SW-1010-13 Left Flipper (Cabinet side)

- SW-10A-48 Right Flipper (Cabinet side)

Notes: * P/N is for entire Diagnostic Switch Assembly, including H S Reset Switch. ** Optotransistor on: (1) Backbox Interconnect Bd; (2) Bldg Positioner Bd; (3) 3-Dr Tgt Positioner Bd. *** [Paired Kicker Actuating Sw: A-4834-H; B-8734-1].

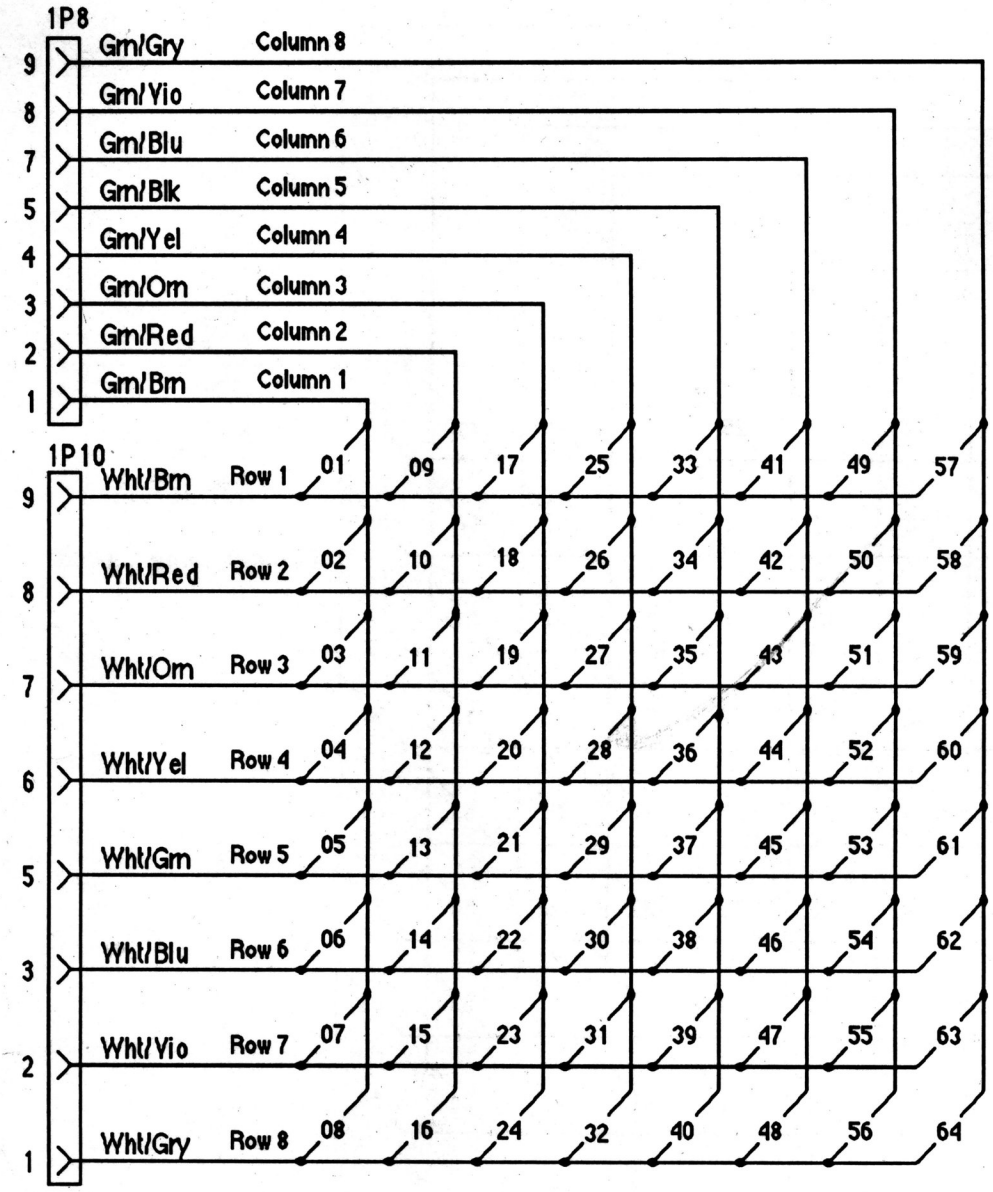
1P8
9 Grn/Gry Column 8
8 Grn/Vio Column 7
7 Grn/Blu Column 6
5 Grn/Blk Column 5
4 Grn/Yel Column 4
3 Grn/Orn Column 3
2 Grn/Red Column 2
1 Grn/Brn Column 1
1P10
9 Wht/Brn Row 1 01 09 17 25 33 41 49 57
8 Wht/Red Row 2 02 10 18 26 34 42 50 58
7 Wht/Orn Row 3 03 11 19 27 35 43 51 59
6 Wht/Yel Row 4 04 12 20 28 36 44 52 60
5 Wht/Grn Row 5 05 13 21 29 37 45 53 61
3 Wht/Blu Row 6 06 14 22 30 38 46 54 62
2 Wht/Vio Row 7 07 15 23 31 39 47 55 63
1 Wht/Gry Row 8 08 16 24 32 40 48 56 64

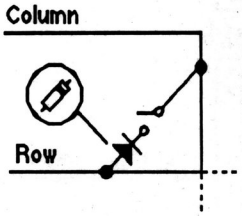

Typical Switch Circuit

EARTHSHAKER Lamp-Matrix Table

COLUMN / ROW	1 Q66 YEL-BRN 1J7-1	2 Q64 YEL-RED 1J7-2	3 Q62 YEL-ORN 1J7-3	4 Q60 YEL-BLK 1J7-4	5 Q58 YEL-GRN 1J7-6	6 Q56 YEL-BLU 1J7-7	7 Q54 YEL-VIO 1J7-8	8 Q52 YEL-GRY 1J7-9
Q80 1 RED-BRN 1J6-1	Captive Ball 1 (low) 1	BONUS 2X 9	Building 7 17	Building 3 25	Miles 1 33	Top Jet Bumper 41	Left Road Sign 49	Right Road Sign 57
Q81 2 RED-BLK 1J6-2	Captive Ball 2 2	BONUS 3X 10	Building 8 18	Right Standup (2) (High) 26	Miles 2 34	Left Jet Bumper 42	Left Standup (1) 50	Jackpot (SP) 1 58
Q82 3 RED-ORN 1J6-3	Captive Ball 3 3	BONUS 4X 11	Building 9 19	Right Standup (3) (Low) 27	Miles 3 35	Right Jet Bumper 43	Eject Lock 51	Jackpot (SP) 2 59
Q83 4 RED-YEL 1J6-5	Captive Ball 4 4	BONUS 5X 12	Building 4 20	Right Standup 50K 28	Miles 4 36	Right Ramp Jackpot 44	Eject Top (5) 52	Jackpot (SP) 3 60
Q84 5 RED-GRN 1J6-6	Captive Ball 5 (high) 5	BONUS 6X/Lites Ex. Ball 13	Building 5 21	R Inside Return Lane (7) 29	Miles 5 37	Right Ramp Lock 45	Center Standup (4) 53	Jackpot (SP) 4 61
Q85 6 RED-BLU 1J6-7	Captive Ball Arrow (9) 6	BONUS 6X/Lites Special 14	Building 6 22	R Outside Return Lane 30	Miles 10 38	Right Ramp 3 Miles 46	Drop Hole Extra Ball 54	Jackpot (SP) 5 62
Q86 7 RED-VIO 1J6-8	Spinner 7	L Return Lane 15	Building 1 23	Right Outlane 31	Miles 20 39	Center Ramp 100K 47	Drop Hole Lock 55	Jackpot (SP) 6 63
Q87 8 RED-GRY 1J6-9	Jet Bumper Center 8	Left Outlane (8) 16	Building 2 24	SHOOT AGAIN 32	Miles 30 40	Center Ramp 2 Miles 48	Under Fault Loop (6) 56	Jackpot (SP) 7 64

TL = Top Left TR = Top Right BL = Bottom Left BR = Bottom Right (7) = "Zone" SP = Speaker Panel ** = 2 Lamps

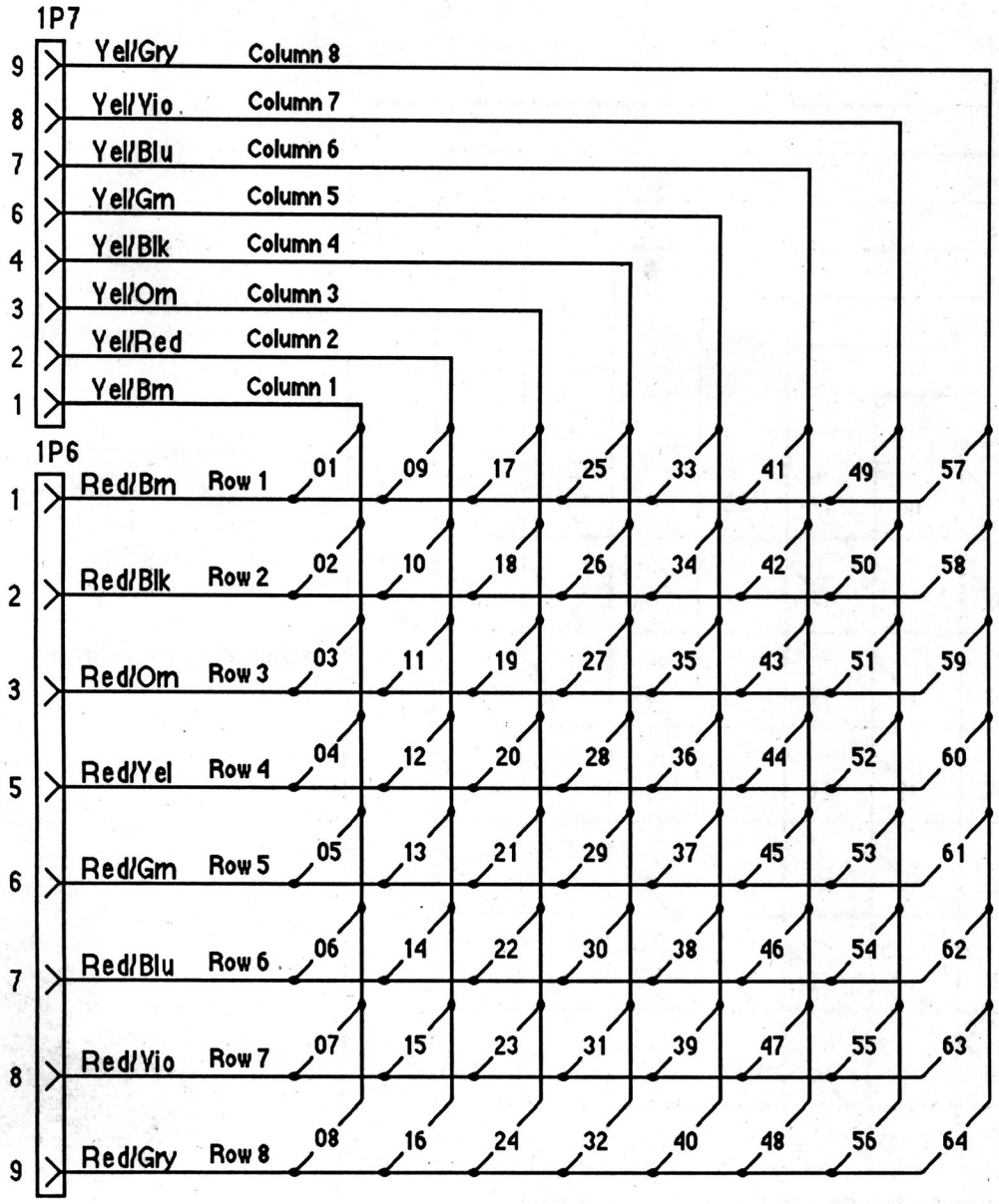
1P7
9 Yel/Gry Column 8
8 Yel/Vio Column 7
7 Yel/Blu Column 6
6 Yel/Grn Column 5
4 Yel/Blk Column 4
3 Yel/Orn Column 3
2 Yel/Red Column 2
1 Yel/Brn Column 1
1P6
1 Red/Brn Row 1 01 09 17 25 33 41 49 57
2 Red/Blk Row 2 02 10 18 26 34 42 50 58
3 Red/Orn Row 3 03 11 19 27 35 43 51 59
5 Red/Yel Row 4 04 12 20 28 36 44 52 60
6 Red/Grn Row 5 05 13 21 29 37 45 53 61
7 Red/Blu Row 6 06 14 22 30 38 46 54 62
8 Red/Vio Row 7 07 15 23 31 39 47 55 63
9 Red/Gry Row 8 08 16 24 32 40 48 56 64

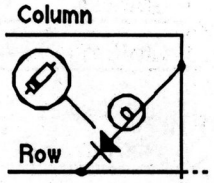

Typical Lamp Circuit

EARTHSHAKER Switch-Matrix Table

ROW \ COLUMN	1 Q45 GRN-BRN 1J8-1	2 Q49 GRN-RED 1J8-2	3 Q44 GRN-ORN 1J8-3	4 Q48 GRN-YEL 1J8-4	5 Q43 GRN-BLK 1J8-5	6 Q47 GRN-BLU 1J8-7	7 Q42 GRN-VIO 1J8-8	8 Q46 GRN-GRY 1J8-9
1 WHT-BRN 1J10-9	Plumb Bob Tilt 1	Playfield Tilt 9	Left Outlane 17	25	On Ramp 50K 33	Spinner 41	49	Flipper Right 57
2 WHT-RED 1J10-8	C Side Power A/C Relay 2	Outhole 10	Left Return Lane (8) 18	26	On Ramp 25K 34	Fault Open 42	Ball Shooter 50	Flipper Left 58
3 WHT-ORN 1J10-7	Credit Button 3	Ball Trough #1 (R) 11	Left Standup (1) 19	3-Bank DT (left) 27	On Ramp 100K 35	Right Ramp Entry 43	51	59
4 WHT-YEL 1J10-6	Left Coin Chute 4	Ball Trough #2 (Mid) 12	Eject Hole (5) 20	3-Bank DT (mid) 28	On Ramp Bypass 36	Center Ramp Entry 44	Left Jet Bumper 52	60
5 WHT-GRN 1J10-5	Center Coin Chute 5	Ball Trough #3 (L) 13	Right Standup (high) (2) 21	3-Bank DT (right) 29	Ball Popper (top) 37	Center Ramp Middle 45	Right Jet Bumper 53	61
6 WHT-BLU 1J10-3	Right Coin Chute 6	Right Inside Return Lane (7) 14	Right Standup (low) (3) 22	Center Standup (4) 30	Under Playfield Drop Hole 1 38	Center Ramp End 46	Top Jet Bumper 54	62
7 WHT-VIO 1J10-2	Slam Tilt 7	Right Outside Return Lane 15	Captive Ball (9) 23	Right Loop (6) 31	Under Playfield Drop Hole 2 39	47	BL Kicker ("sling") 55	63
8 WHT-GRY 1J10-1	High Score Reset 8	Right Outlane 16	Right Standup (50K) 24	Left Loop (6) 32	Ball Popper (bottom) 40	48	BR Kicker ("sling") 56	64

TL = Top Left TR = Top Right BL = Bottom Left BR = Bottom Right (7) = "Zone"

Lamps

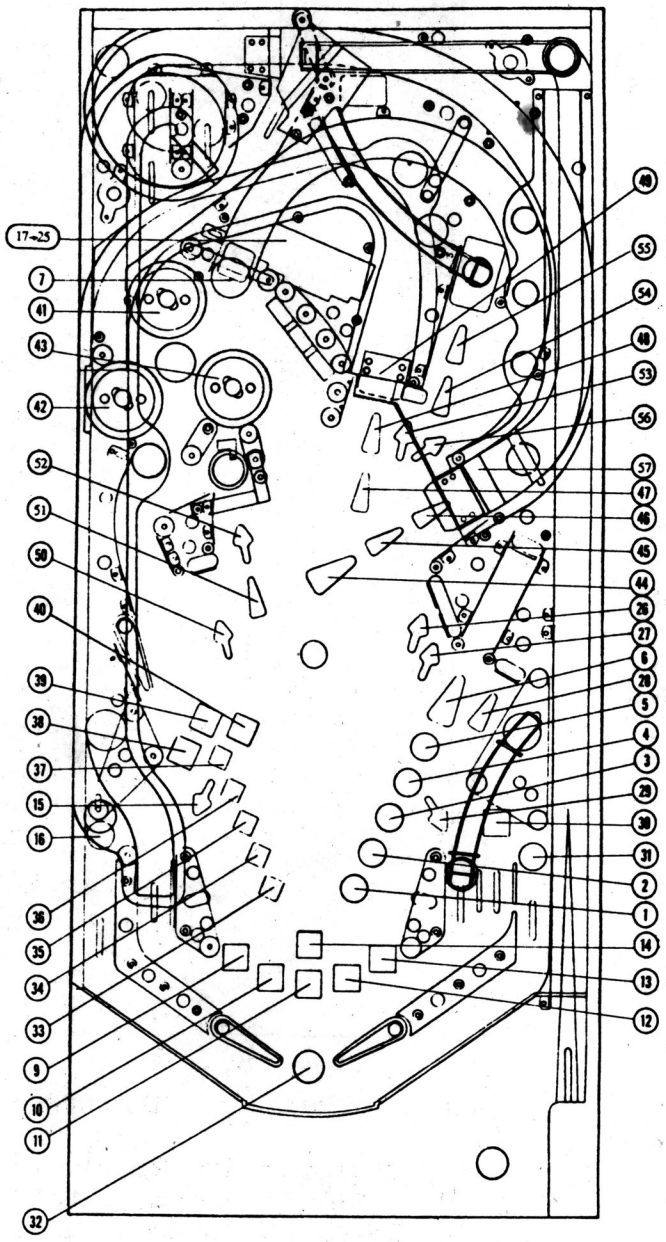

Lamp	Location/Description
1	25K (Captive Ball, lowest)
2	50K (Captive Ball, lower)
3	100K (Captive Ball, mid)
4	150K (Captive Ball, higher)
5	250K (Captive Ball, highest)
6	Zone 9 (Captive Ball arrow)
7	3000 W/LIT (Spinner)
8	5000 W/LIT (J Bumper Center)
9	Bonus 2X
10	Bonus 3X
11	Bonus 4X
12	Bonus 5X
13	Bonus 6X + Lites Extra Ball
14	Bonus 6X + Lites SPECIAL
15	Zone 8 (Left Return Lane)
16	SPECIAL (Left Outlane)
17	Building 7
18	Building 8
19	Building 9
20	Building 4
21	Building 5
22	Building 6
23	Building 1
24	Building 2
25	Building 3
26	Zone 2 (R Standup, high)
27	Zone 3 (R Standup, low)
28	50000 (R Standup)
29	Zone 7 (R Inner Return Lane)
30	Light Spinner (R Out. Ret Lane)
31	SPECIAL (Right Outlane)
32	SHOOT AGAIN
33	Ramp Miles 1
34	Ramp Miles 2
35	Ramp Miles 3
36	Ramp Miles 4
37	Ramp Miles 5
38	Ramp Miles 10
39	Ramp Miles 20
40	Ramp Miles 30
41	Top Jet Bumper
42	Left Jet Bumper
43	Right Jet Bumper
44	JACKPOT arrow (R Ramp)
45	LOCK arrow (R Ramp)
46	MILLION arrow (R Ramp)
47	50000 arrow (Cntr Ramp)
48	2 Miles arrow (Cntr Ramp)
49	Left Road Sign
50	Zone 1 (Left Standup)
51	LOCK arrow (Eject Hole)
52	Zone 5 (Eject Hole)
53	Zone 4 (Eject Hole)
54	Extra Ball arrow (Drop Hole)
55	LOCK arrow (Drop Hole)
56	Zone 6 (under Fault Loop)
57	Right Road Sign
58	500K + SPECIAL (Jackpot Value, spkr panel)
59	1 Million (Jackpot Value, spkr panel)
60	1.25 Million (Jackpot Value, spkr panel)
61	1.5 Million (Jackpot Value, spkr panel)
62	1.5 Million + Ex. Ball (Jackpot Value, spkr panel)
63	2 Million (Jackpot Value, spkr panel)
64	2.5 Million (Jackpot Value, spkr panel)

Playfield Parts

Item	Part No.	Description
1	02-4003	Post
2	C-11626-L-3	Lwr Left Flipper Assy
a)	20-9250-6	Lg Flipper Paddle & Shaft
3	B-12513	Left Flipper Return Frame
4	12-6835	Bottom Arch Fence
5	12-6466-10	Wireform, 2-1/2"
6	B-9463	Kicker Arm ("Sling") Assy
7	R-12487	Center Ramp Assembly
8	C-11626-L-6	Upper Left Flipper Assy
a)	20-9250-6	Lg Flipper Paddle & Shaft
9	B-11696-1	Standup Target, Blue
10	A-12525	Ball Guide Assembly
11	A-12523	Ball Guide Assembly
12	A-12557	Ball Gate Assembly
a)	12-6731-1	Gate Wire
13	B-12514	Ball Guide Assembly
14	B-9361-R	Eject Hole
a)	03-7351-1	Tr Red Plastic Ball Seat
15	01-9051	Ball Deflector
16	B-9414	Jet Bumper Assy (3)
17	C-11223-1	3-Bank Drop Target
18	B-12515	Ball Guide Assembly
19	D-12364	Spiral Ramp Exit Chute
20	A-12517	Ball Guide Assembly
21	D-12364	Spiral Ramp Base Portion
22	B-12526	Ball Guide Assembly
23	B-12586	Spinner Assy
a)	12-6780	Switch Wire
24	A-12522	Ball Guide Assembly
25	A-12589	Ball Gate Assembly
a)	12-6565	Gate Wire
26	A-12500	Switch Gate Assembly
a)	12-6733	Gate Wire
b)	12-6785	Switch Wire
27	C-12429	Zone Opener Assembly
28	D-12563	Ball Guide Assembly
29	12-6813	Upr Right Wire Ramp
30	D-11335-2	Top Ball Popper
31	D-12562	Ball Guide Assembly
32	C-12564	Ball Guide Assembly
33	12-6814	Mid Right Wire Ramp
34	B-12728	Building Assembly
35	A-12351	Drop Hole Deflect/Bracket
36	C-12561	Ball Guide Assembly
37	D-12489	Right Ramp Assembly
38	B-12527	Ball Guide Assembly
39	B-12583-6	Standup Target, Yellow
40	A-12524	Ball Guide Assembly
41	A-12558	Ball Gate Assembly
a)	12-6796	Gate Wire
42	C-12584	Bridge (Signs) Assembly
43	B-12516	Ball Guide Assembly
44	B-11696-5	Standup Target, White
46	B-12516	Ball Guide Assembly
47	D-12642	Bottom Ball Popper

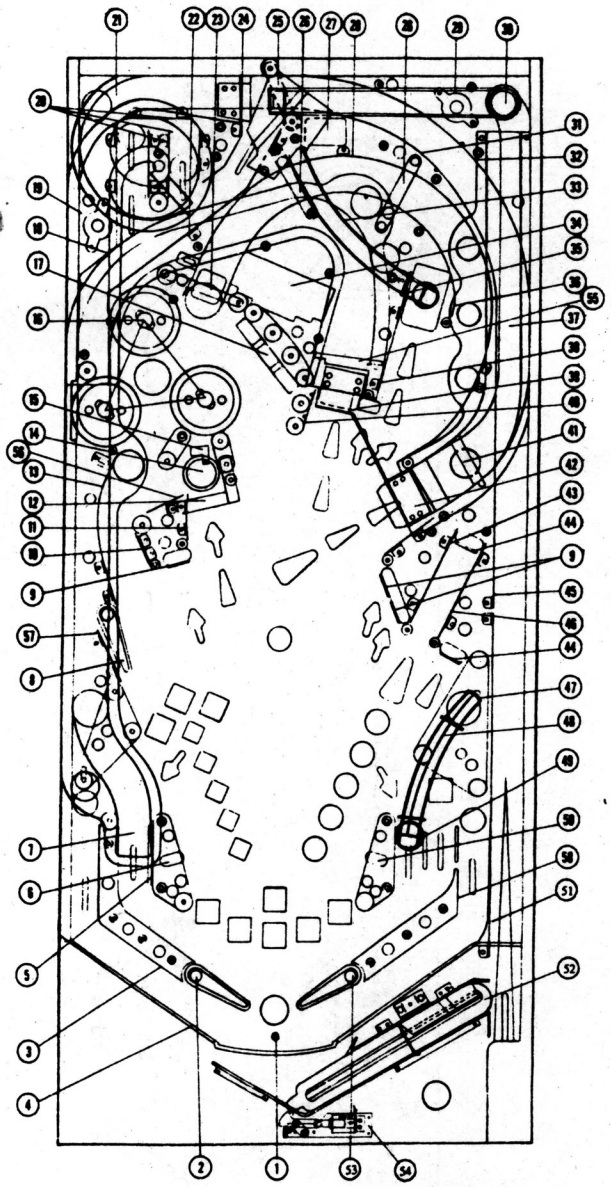

Item	Part No.	Description
48	12-6812	Lwr Right Wire Ramp
49	12-6466-6	Wireform, 1-1/2"
50	B-9463	Kicker Arm ("Sling") Assy
51	C-12579	Ball Guide Assembly
52	C-9638	Ball Shooter Lane Feeder
53	C-11626-R-3	Lwr Right Flipper Assembly
54	B-8039-2	Outhole Kicker Assy
55	A-12506	Switch Gate Assembly
56	A-12521	Ball Guide Assembly
57	A-12560	Ball Guide Assembly
58	B-12512	Rt Flipper Return Frame

(Playfield Parts beneath Bottom Arch)

B-8623	Upr Trough Baffle Assy
01-5575	Bottom Arch Mtg Bracket
C-8235	Lwr Trough Baffle Assy
12-6542	Baffle Wire form
01-3569-1	Ball Trough

Section 3

Reference Diagrams

&

Schematics

- **Diagrams and Schematics:**

  Cabinet Wiring
  3-Bank Opto Board
  Power Supply Board
  System 11B CPU Board
  Master Display Board
  Audio Board
  Aux Power Driver Board
  Backbox Interconnect Board
  Controlled, Special, & Switched Solenoids
  Power Wiring
  Game Circuit Boards Interboards Signals

- **Diagnostic Test Flowchart**

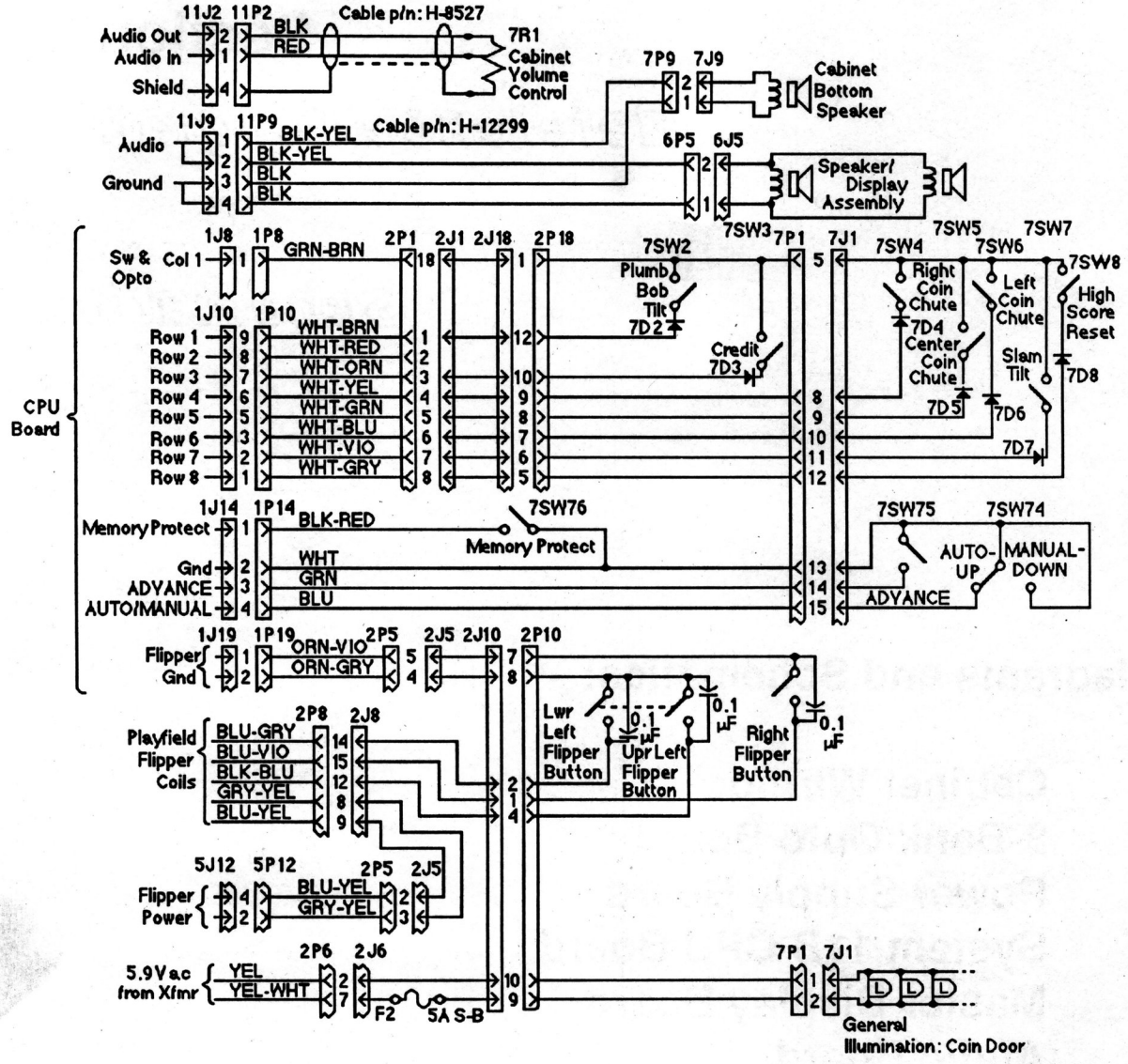

EARTHSHAKER! CABINET WIRING

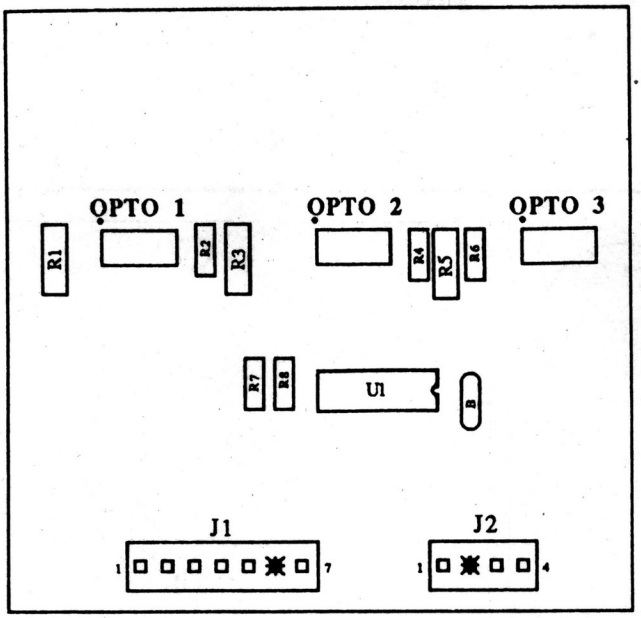

3-BANK DROP TARGET BOARD
p/n C-12559

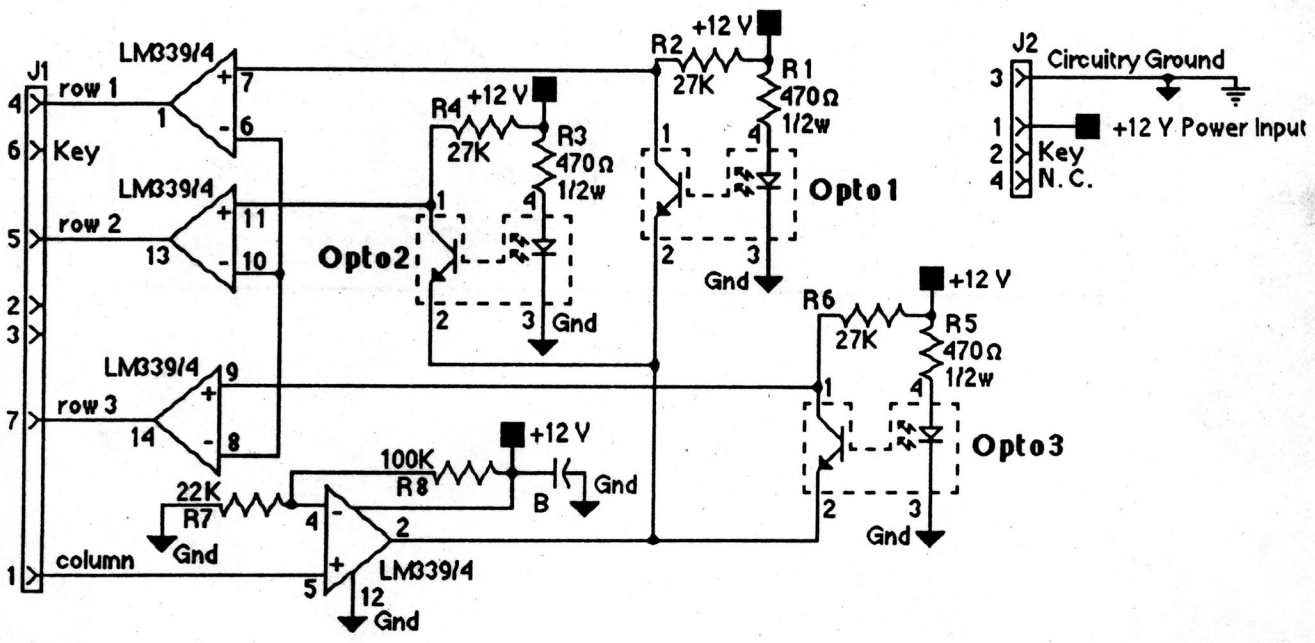

3-BANK DROP TARGET BOARD & SCHEMATIC

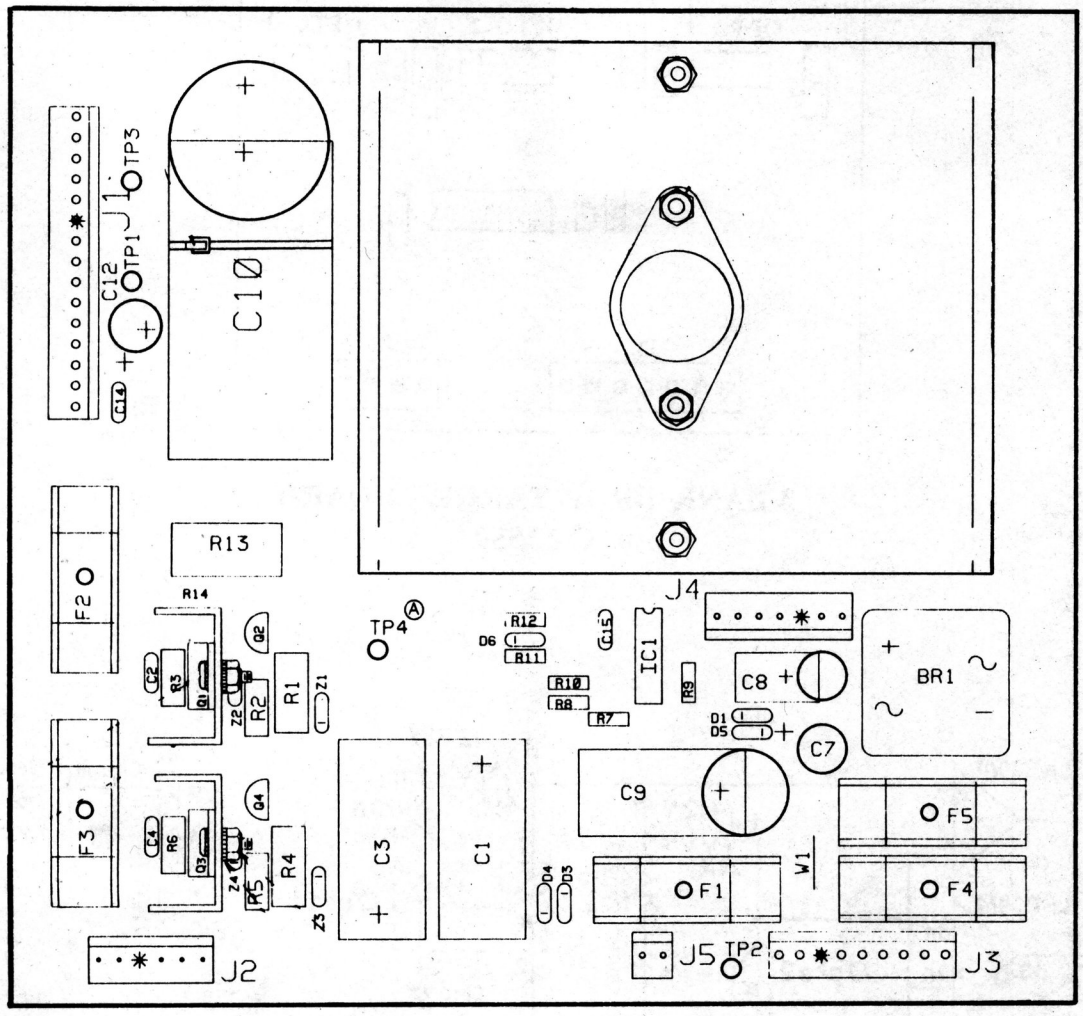

POWER SUPPLY BOARD
p/n D-12246

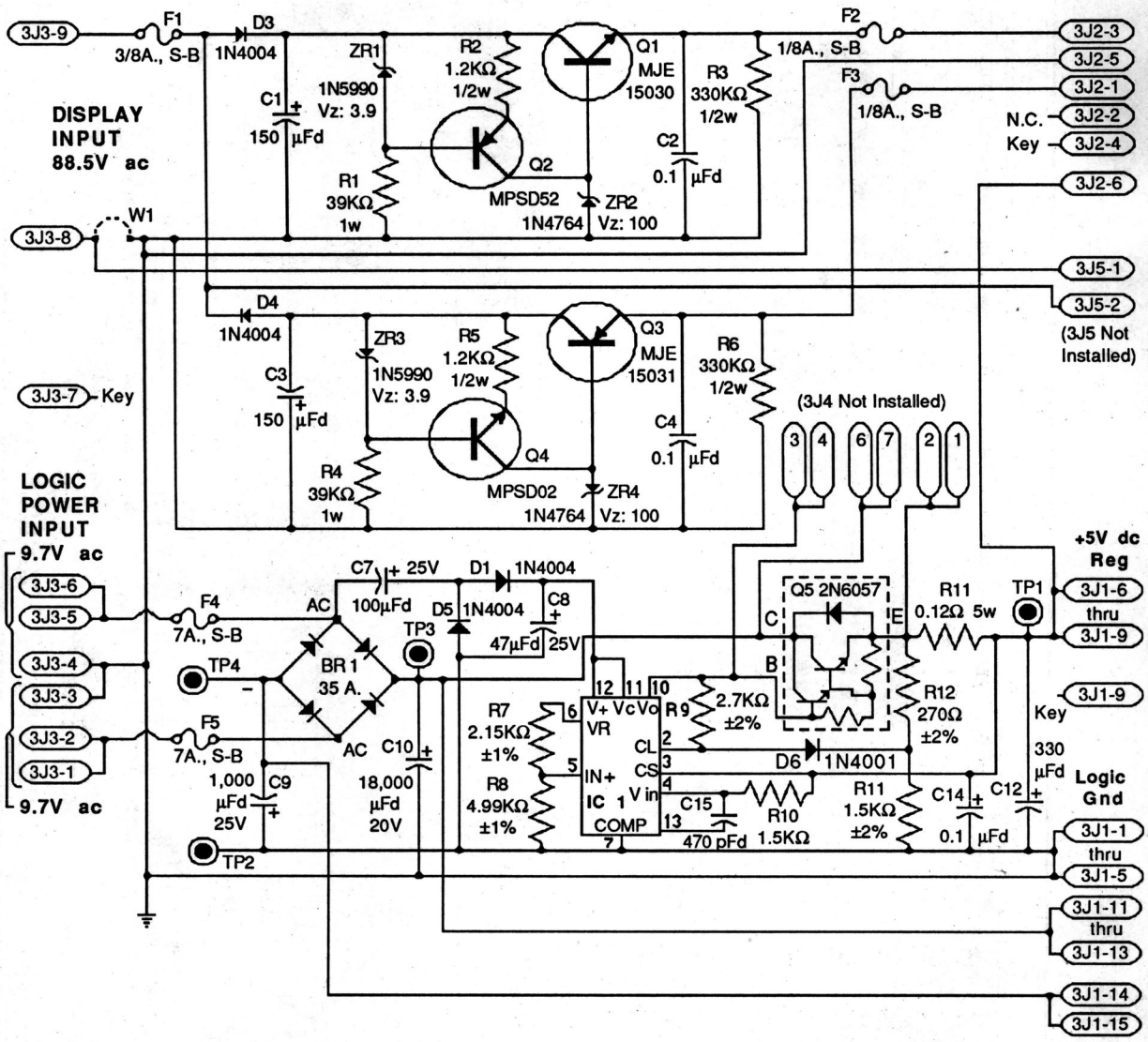

POWER SUPPLY BOARD SCHEMATIC

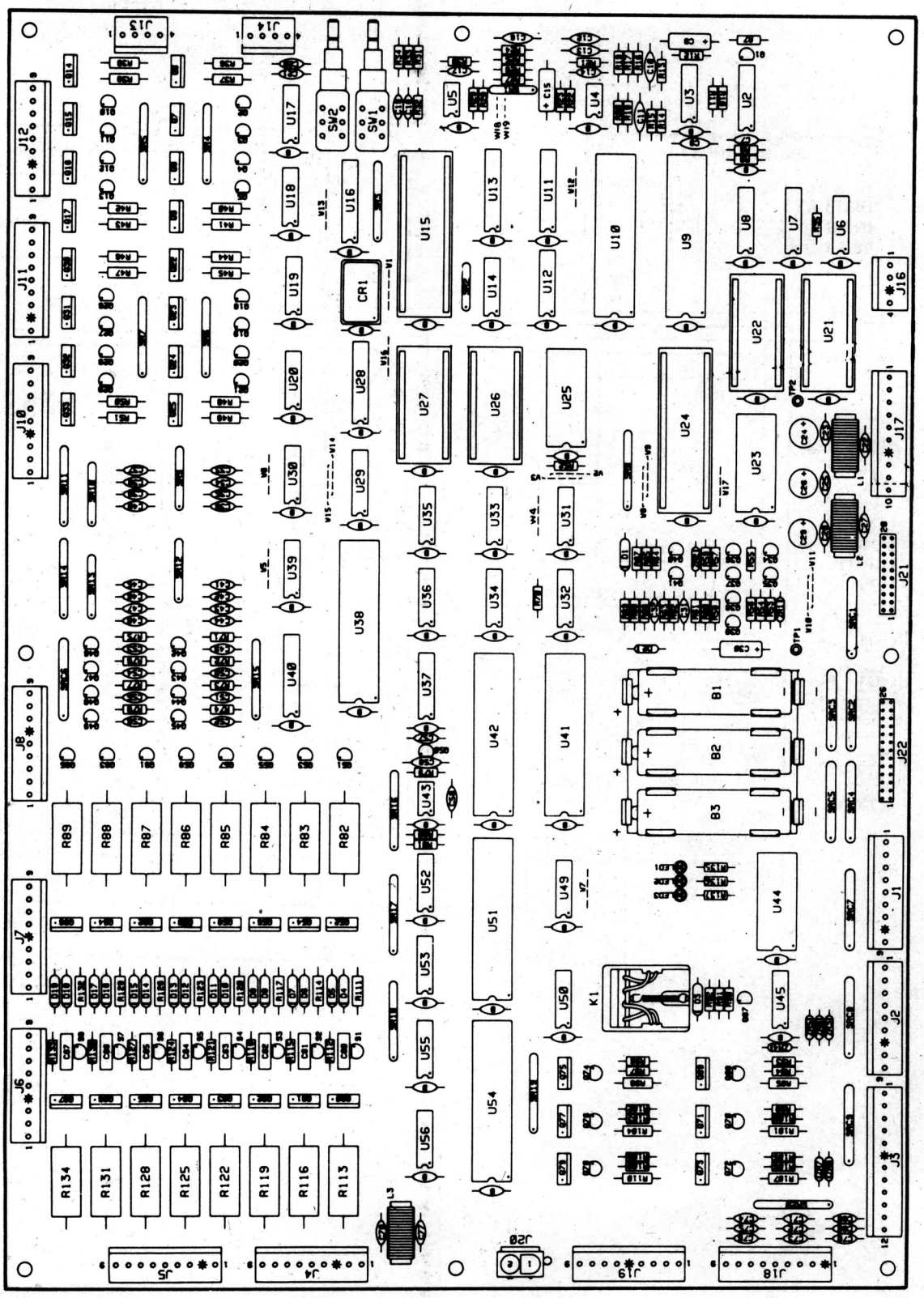

SYSTEM 11B CPU BOARD
p/n D-11883

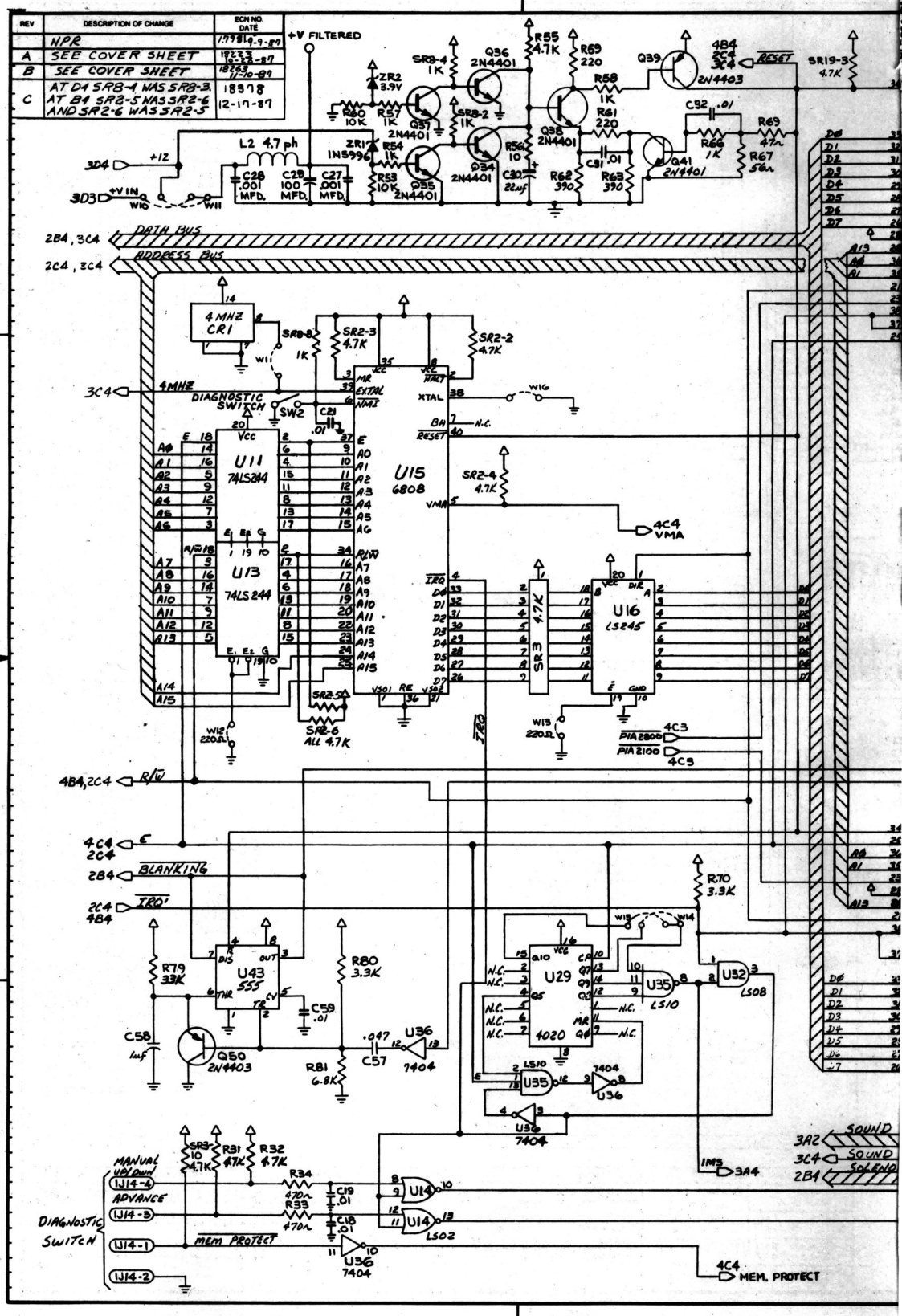
REV
DESCRIPTION OF CHANGE
ECN NO. DATE
NPR
SEE COVER SHEET
SEE COVER SHEET
AT D4 SR8-4 WAS SR8-3. AT B4 SR2-5 WAS SR2-6 AND SR2-6 WAS SR2-5
+V FILTERED
L2 4.7 ph
4 MHZ CR1
DIAGNOSTIC SWITCH
SW2
U11 74LS244
U13 74LS244
U15 6808
U16 LS245
U29 4020
U43 555
U35 LS10
U32 LS08
U36 7404
U14 LS02
R70 3.3K
R79 33K
R80 3.3K
R81 6.8K
C58 1uf
C59 .01
C57 .047
Q50 2N4403
DATA BUS
ADDRESS BUS
4MHZ
R/W
E
BLANKING
IRQ'
RESET
VMA
MANUAL ADVANCE
DIAGNOSTIC SWITCH
MEM PROTECT
SOUND
SOLENOID
4C4 MEM. PROTECT

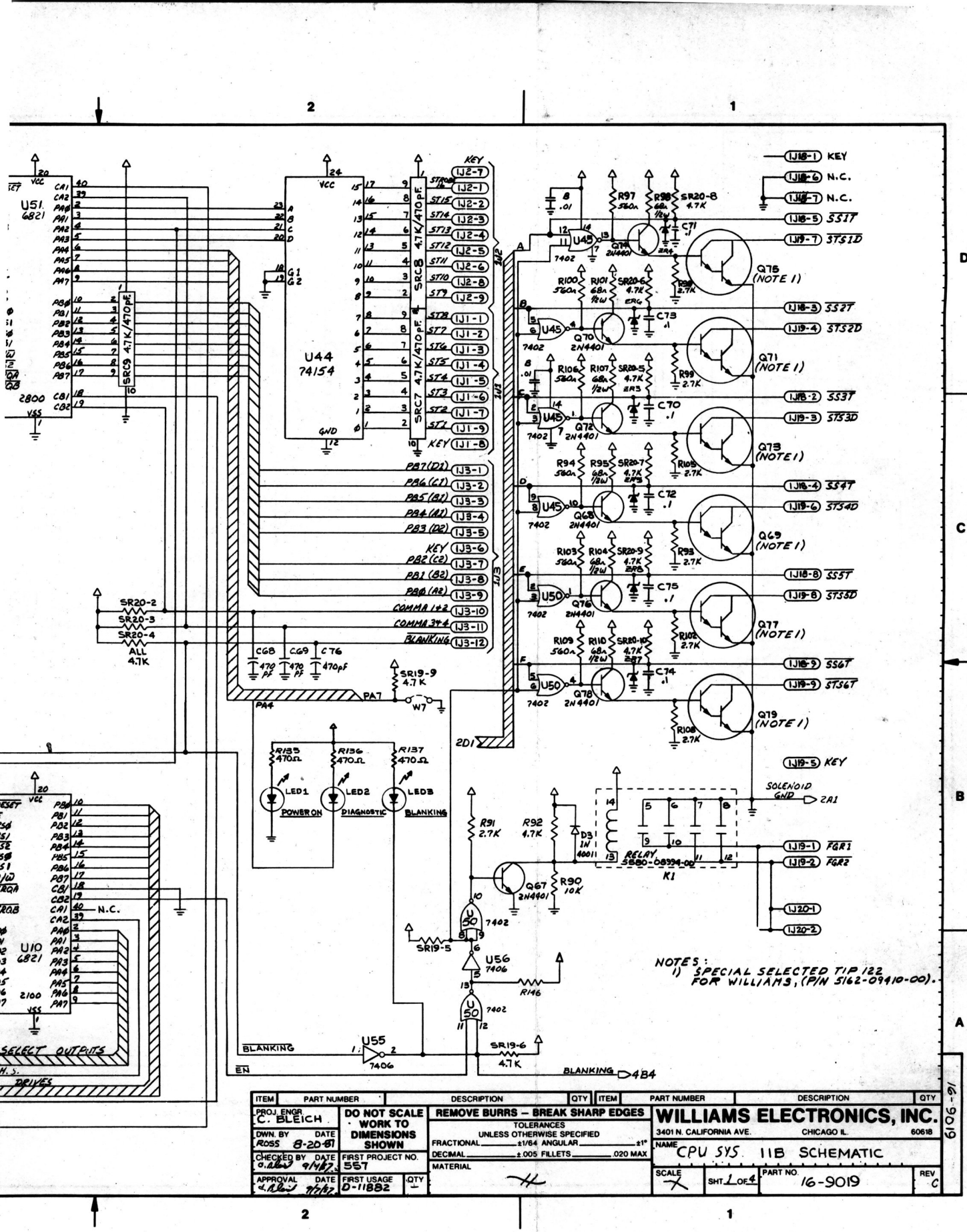

System 11B CPU Schematic (16-9019, Sheet 1 of 4)

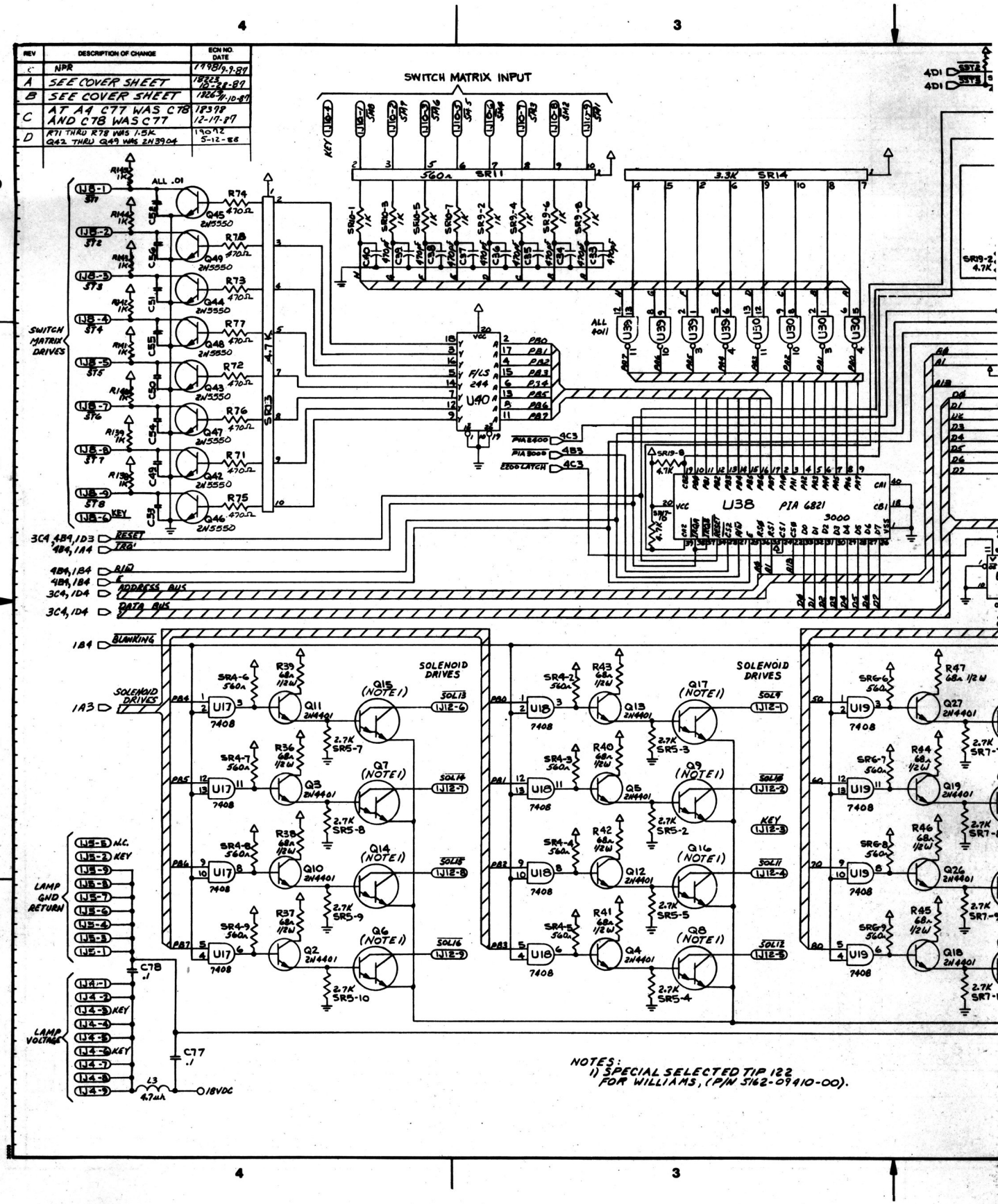
REV | DESCRIPTION OF CHANGE | ECN NO. DATE
C NPR 17981 9-9-87
A SEE COVER SHEET 18223 10-28-87
B SEE COVER SHEET 18264 11-10-87
C AT A4 C77 WAS C78 AND C78 WAS C77 18398 12-17-87
D R71 THRU R78 WAS 1.5K Q42 THRU Q49 WAS 2N3904 19012 5-12-88
SWITCH MATRIX INPUT
SWITCH MATRIX DRIVES
ALL .01
ALL 4011
U40 F/LS 244
U38 PIA 6821
3000
SOLENOID DRIVES
LAMP GND RETURN
LAMP VOLTAGE
18VDC
RESET
IRQ'
R/W
ADDRESS BUS
DATA BUS
BLANKING
KEY
NOTES:
1) SPECIAL SELECTED TIP 122 FOR WILLIAMS, (P/N 5162-09410-00).

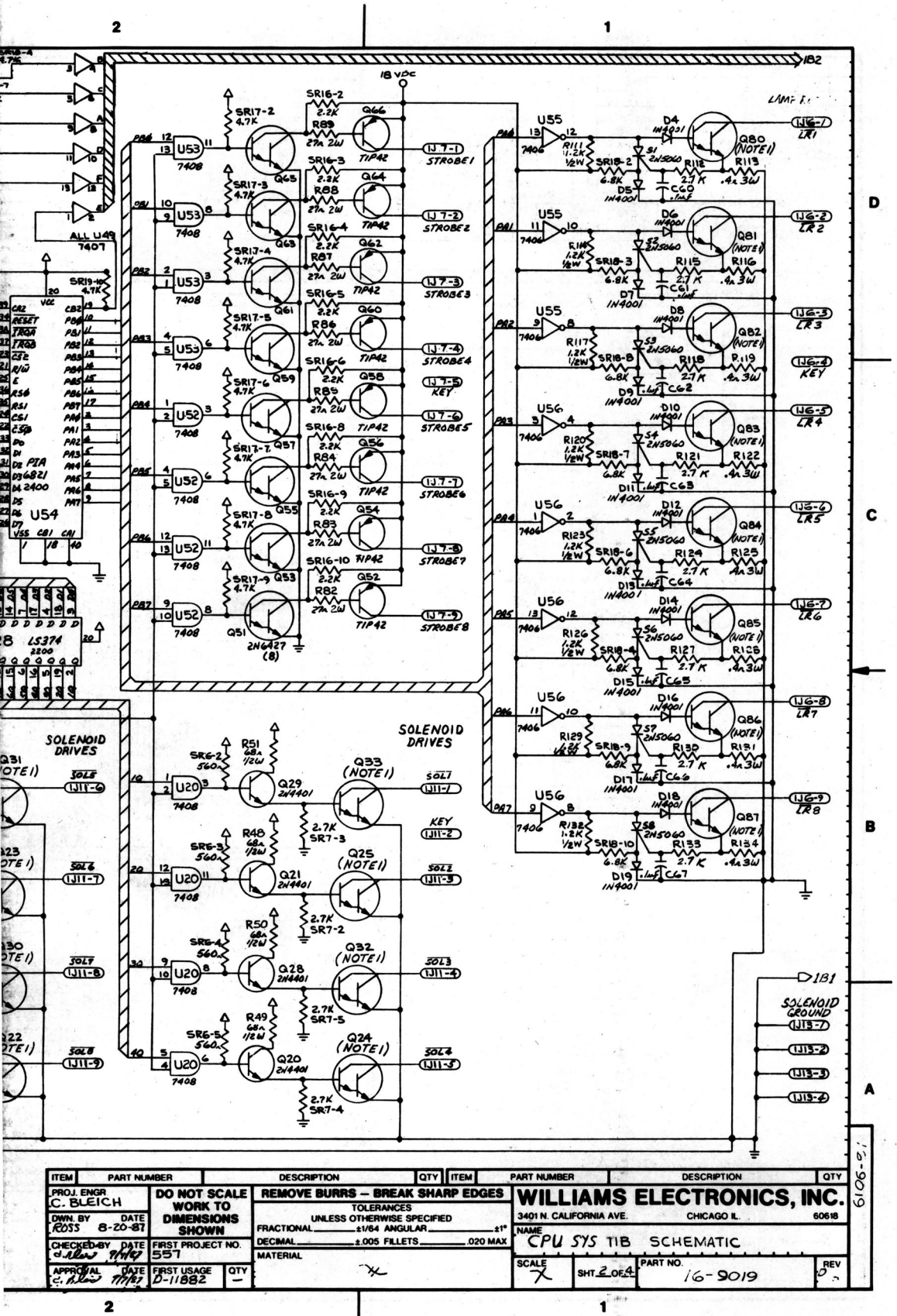

ITEM	PART NUMBER	DESCRIPTION	QTY	ITEM	PART NUMBER	DESCRIPTION	QTY

PROJ. ENGR. C. BLEICH	DO NOT SCALE WORK TO DIMENSIONS SHOWN	REMOVE BURRS – BREAK SHARP EDGES	WILLIAMS ELECTRONICS, INC.
DWN. BY ROSS DATE 8-20-87		TOLERANCES UNLESS OTHERWISE SPECIFIED FRACTIONAL ±1/64 ANGULAR ±1° DECIMAL ±.005 FILLETS .020 MAX	3401 N. CALIFORNIA AVE. CHICAGO IL. 60618
CHECKED BY DATE	FIRST PROJECT NO. 557	MATERIAL	NAME CPU SYS 11B SCHEMATIC
APPROVAL DATE	FIRST USAGE D-11882	QTY —	SCALE X SHT. 2 OF 4 PART NO. 16-9019 REV D

6106-2

System 11B CPU Schematic (16-9019, Sheet 2 of 4)

REV	DESCRIPTION OF CHANGE	ECN NO. DATE
	N.P.R.	19781 7-7-89
A	SEE COVER SHEET	18223 10-23-89
B	SEE COVER SHEET	18569 11-28-89
C	AT C1 SRB-5 WAS SRB-1 DELETE SOUND SECTION @ LOCATION A3	18398 12-19-89

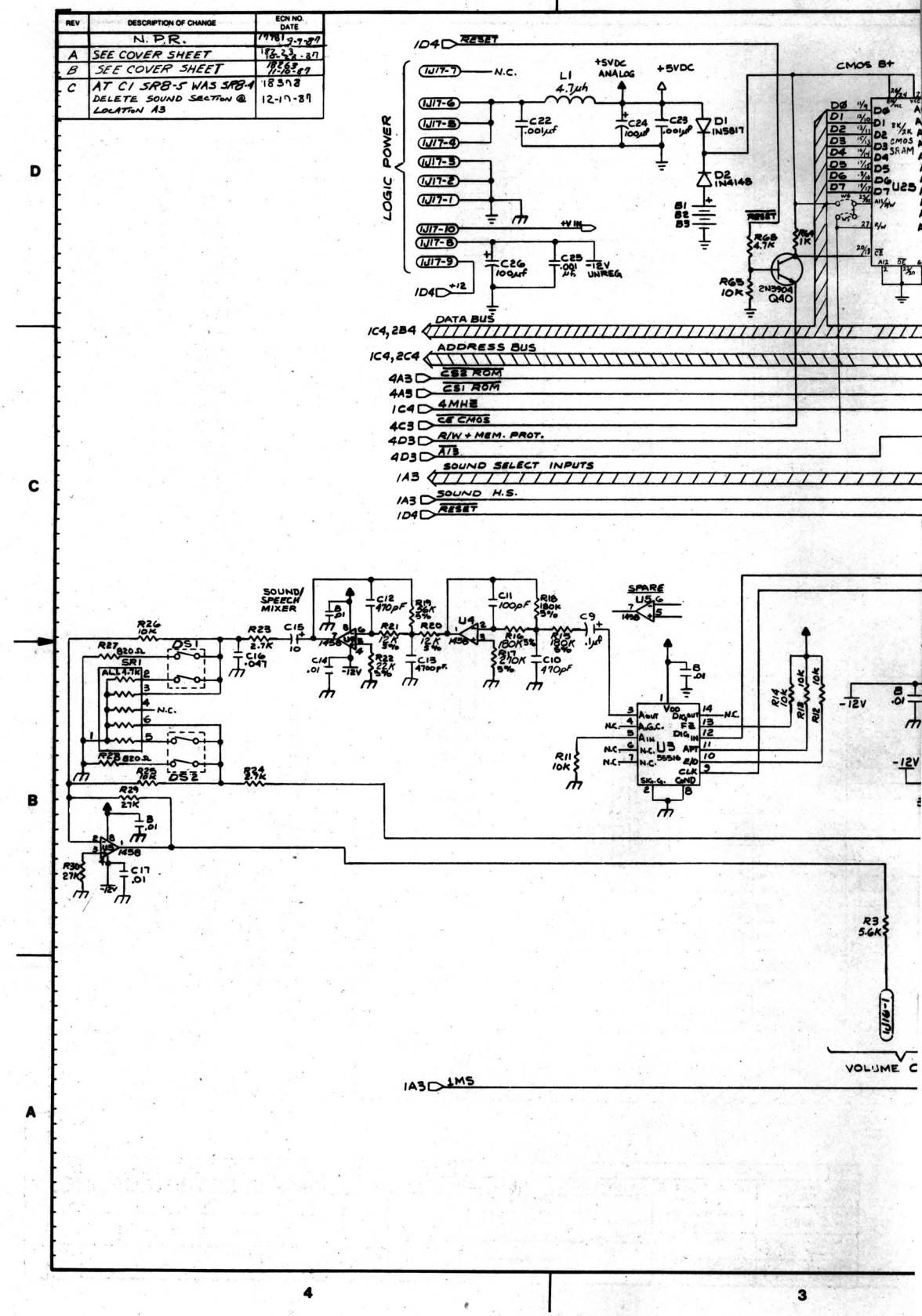

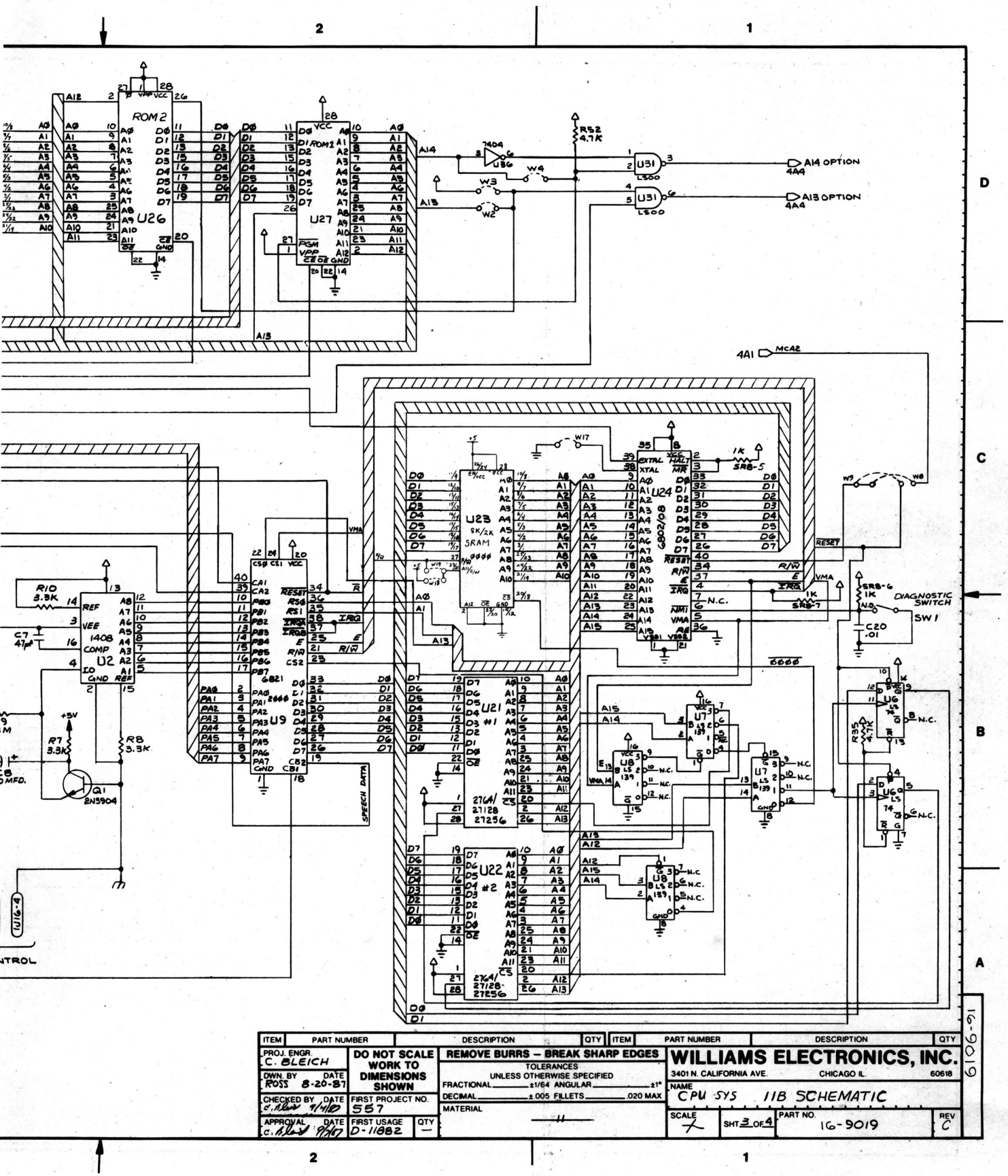

ITEM	PART NUMBER	DESCRIPTION	QTY	ITEM	PART NUMBER	DESCRIPTION	QTY

PROJ. ENGR. C. BLEICH	DO NOT SCALE WORK TO DIMENSIONS SHOWN	REMOVE BURRS – BREAK SHARP EDGES	WILLIAMS ELECTRONICS, INC.
DWN. BY ROSS DATE 8-20-87		TOLERANCES UNLESS OTHERWISE SPECIFIED FRACTIONAL ±1/64 ANGULAR ±1° DECIMAL ±.005 FILLETS .020 MAX	3401 N. CALIFORNIA AVE. CHICAGO IL. 60618
CHECKED BY C. Bleich DATE 9/4/87	FIRST PROJECT NO. 557	MATERIAL — 11 —	NAME CPU SYS 11B SCHEMATIC
APPROVAL C. Bleich DATE 9/8/87	FIRST USAGE D-11882 QTY —	SCALE 1/1 SHT 3 OF 4	PART NO. 16-9019 REV C

16-9019

System 11B CPU Schematic (16-9019, Sheet 3 of 4)

REV	DESCRIPTION OF CHANGE	ECN NO. DATE
	N. P. R.	17981 9-9-87
A	SEE COVER SHEET	18223 10-28-87
B	SEE COVER SHEET	18263 11-10-87
C	SEE SHEET 1-3	18373 12-17-87

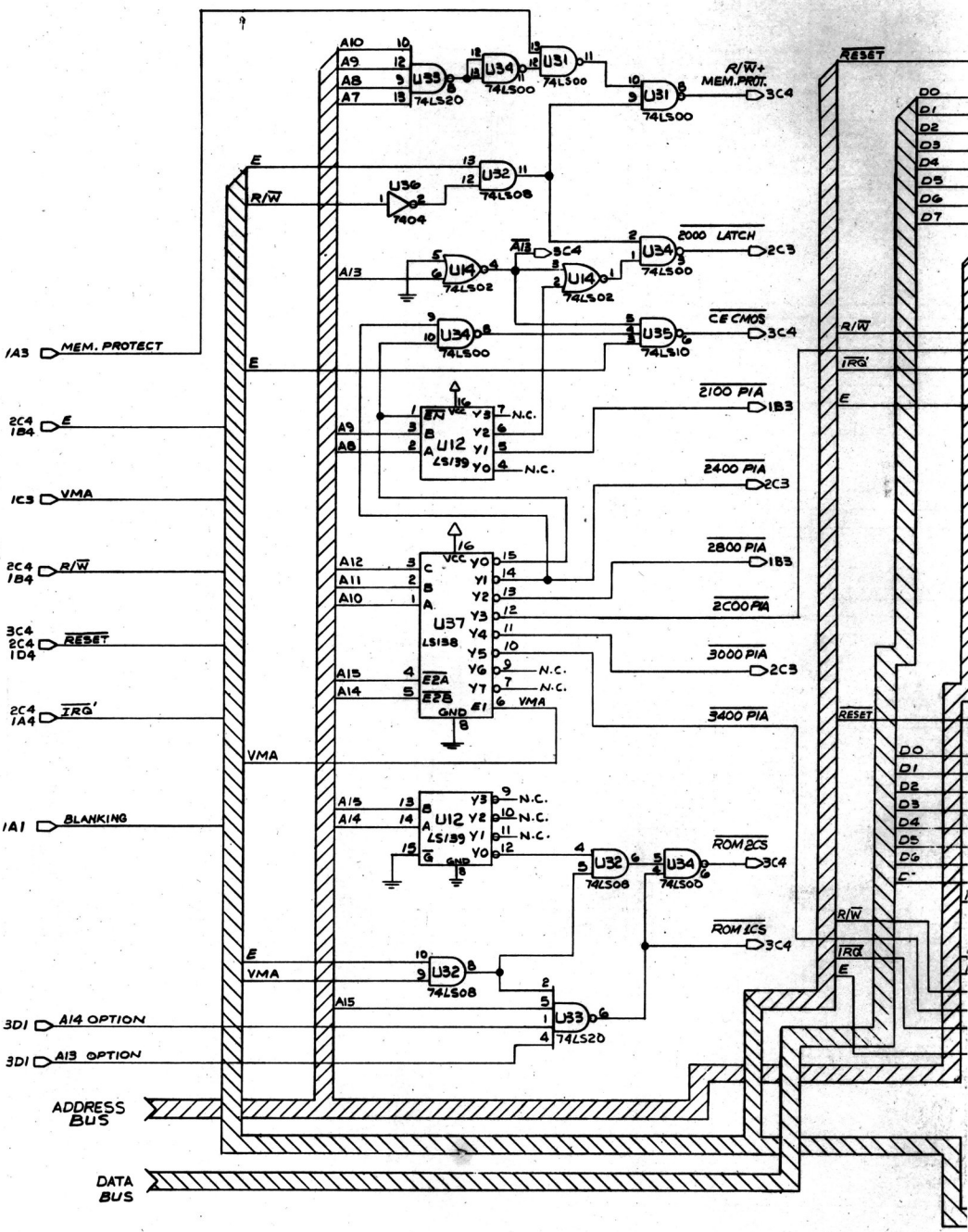

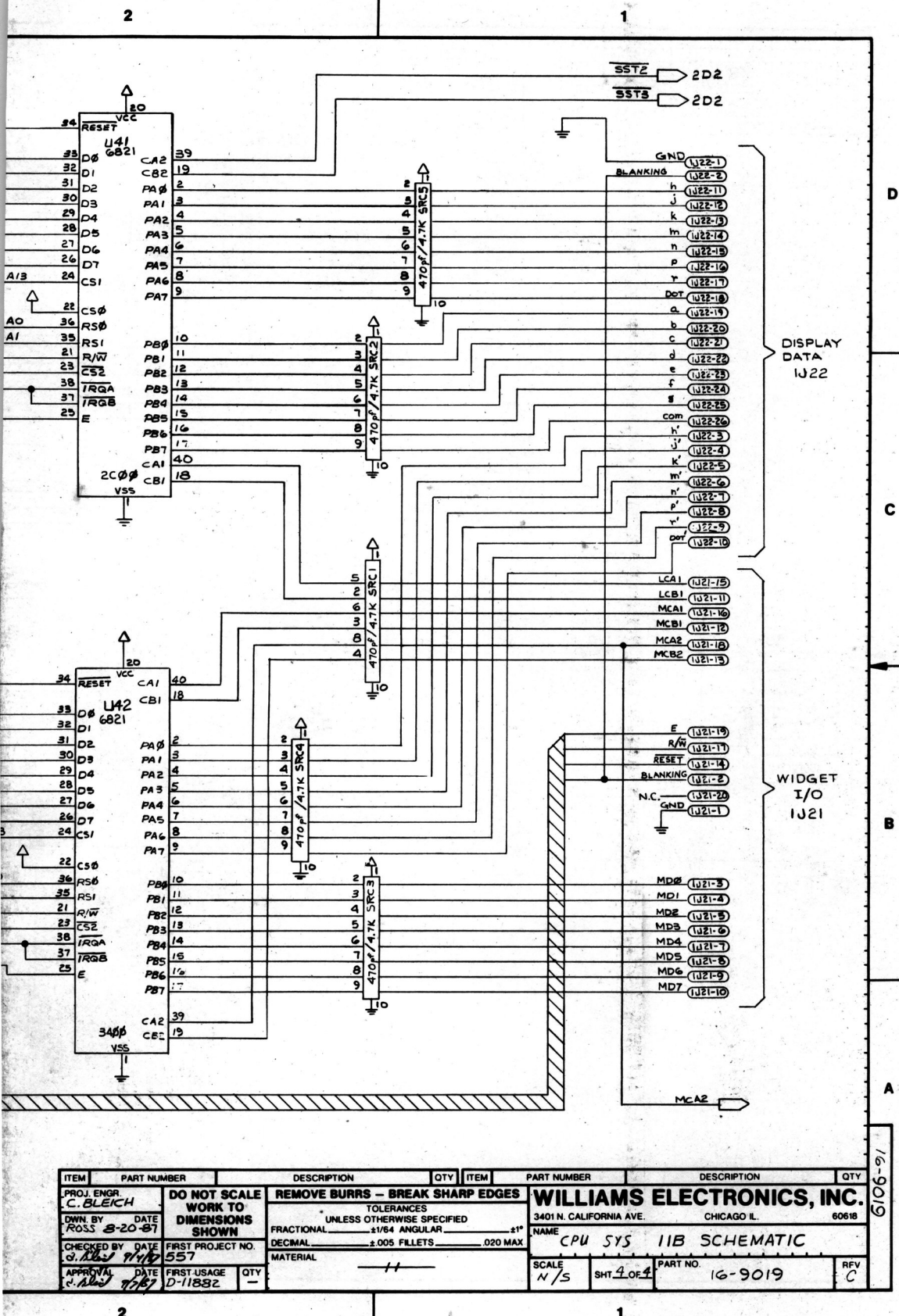

ITEM	PART NUMBER	DESCRIPTION	QTY	ITEM	PART NUMBER	DESCRIPTION	QTY
PROJ. ENGR. C. BLEICH	DO NOT SCALE WORK TO DIMENSIONS SHOWN	REMOVE BURRS – BREAK SHARP EDGES		WILLIAMS ELECTRONICS, INC.			
DWN. BY ROSS 8-20-87		TOLERANCES UNLESS OTHERWISE SPECIFIED		3401 N. CALIFORNIA AVE. CHICAGO IL. 60618			
CHECKED BY DATE	FIRST PROJECT NO. 557	FRACTIONAL ±1/64 ANGULAR ±1°		NAME CPU SYS 11B SCHEMATIC			
APPROVAL DATE	FIRST USAGE D-11882	DECIMAL ±.005 FILLETS .020 MAX		SCALE N/S	SHT 4 OF 4	PART NO. 16-9019	REV C
	QTY —	MATERIAL —					

16-9019

System 11B CPU Schematic (16-9019, Sheet 4 of 4)

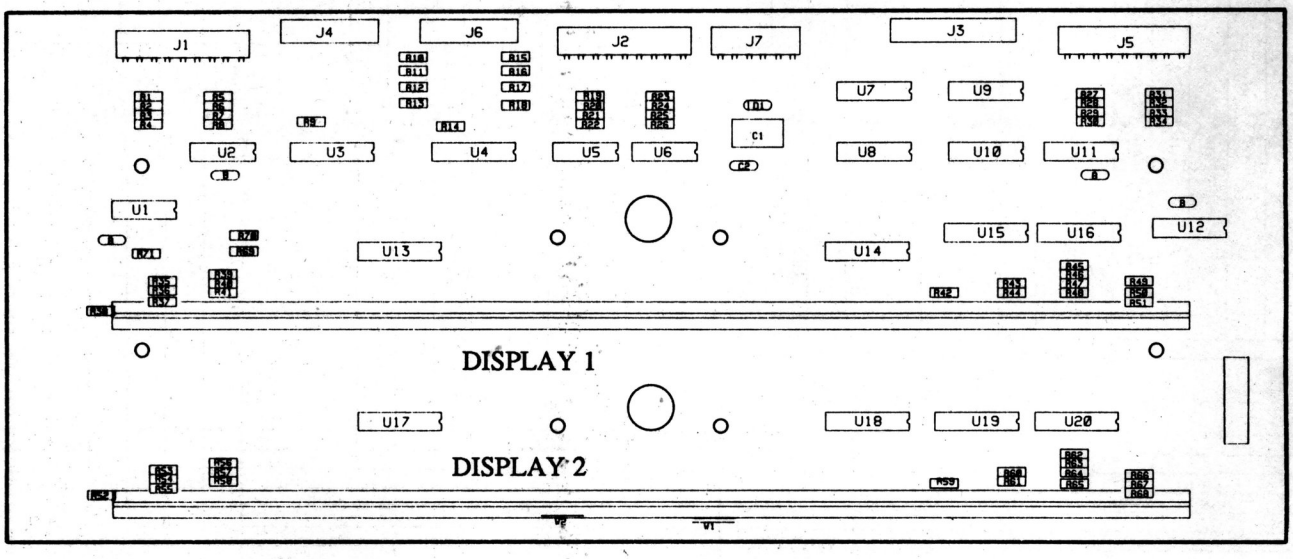

MASTER DISPLAY BOARD
p/n D-12232-1

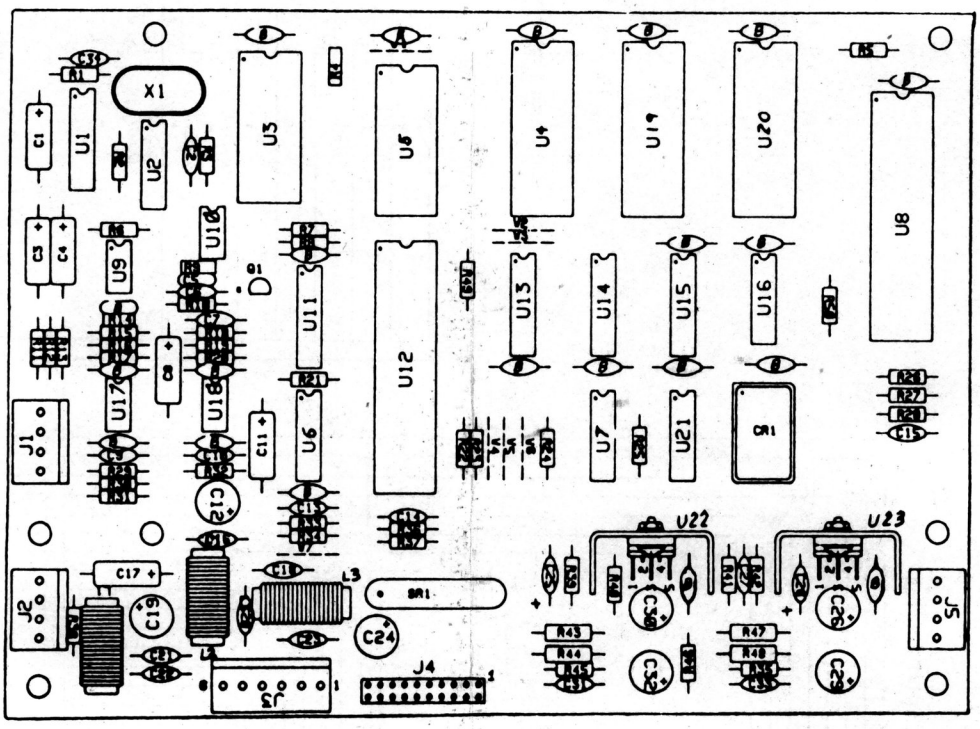

AUDIO BOARD ASSEMBLY
p/n D-11581-568

REV	DESCRIPTION OF CHANGE	ECN NO. DATE
—	NPR	19459 8-1-88

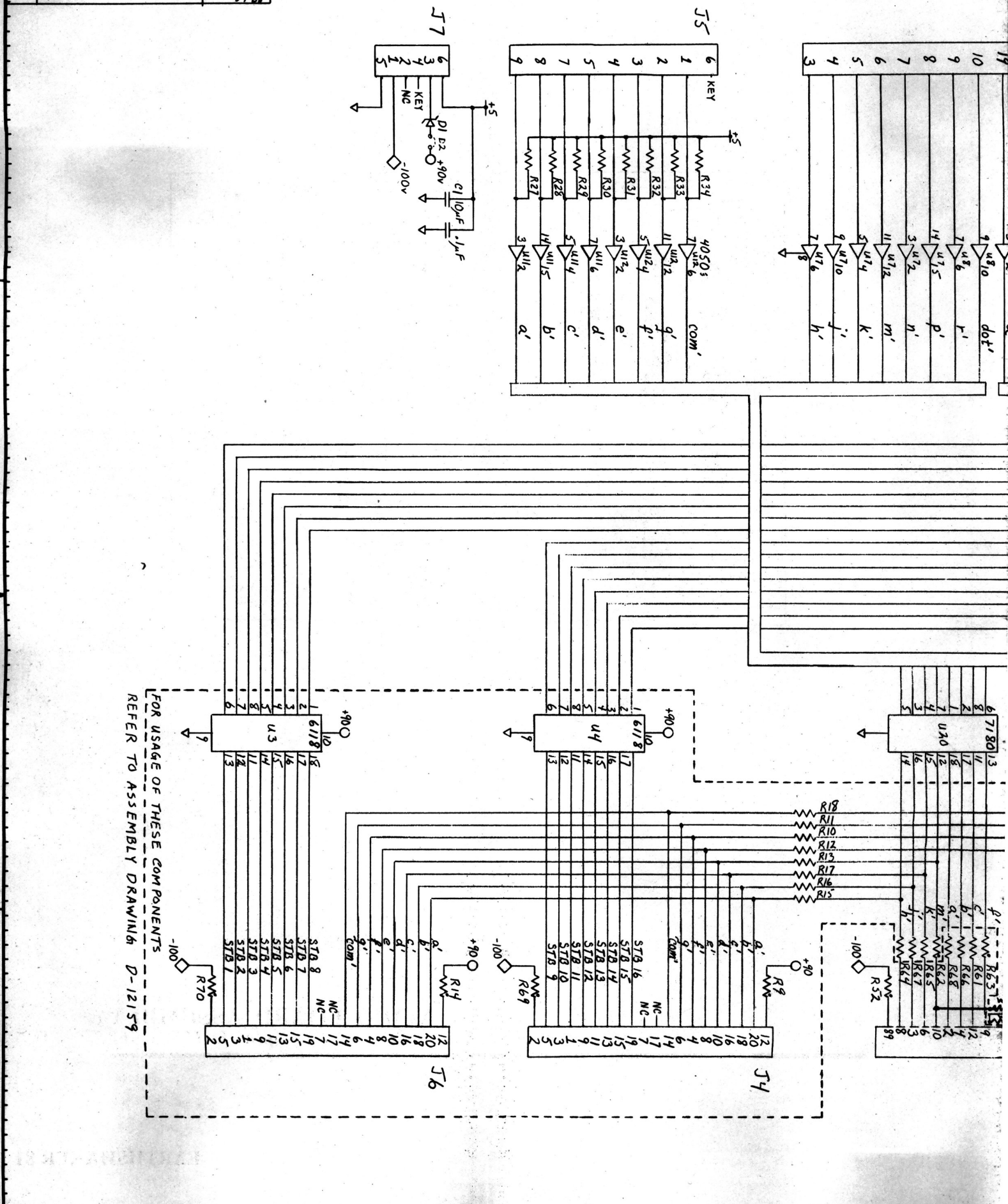

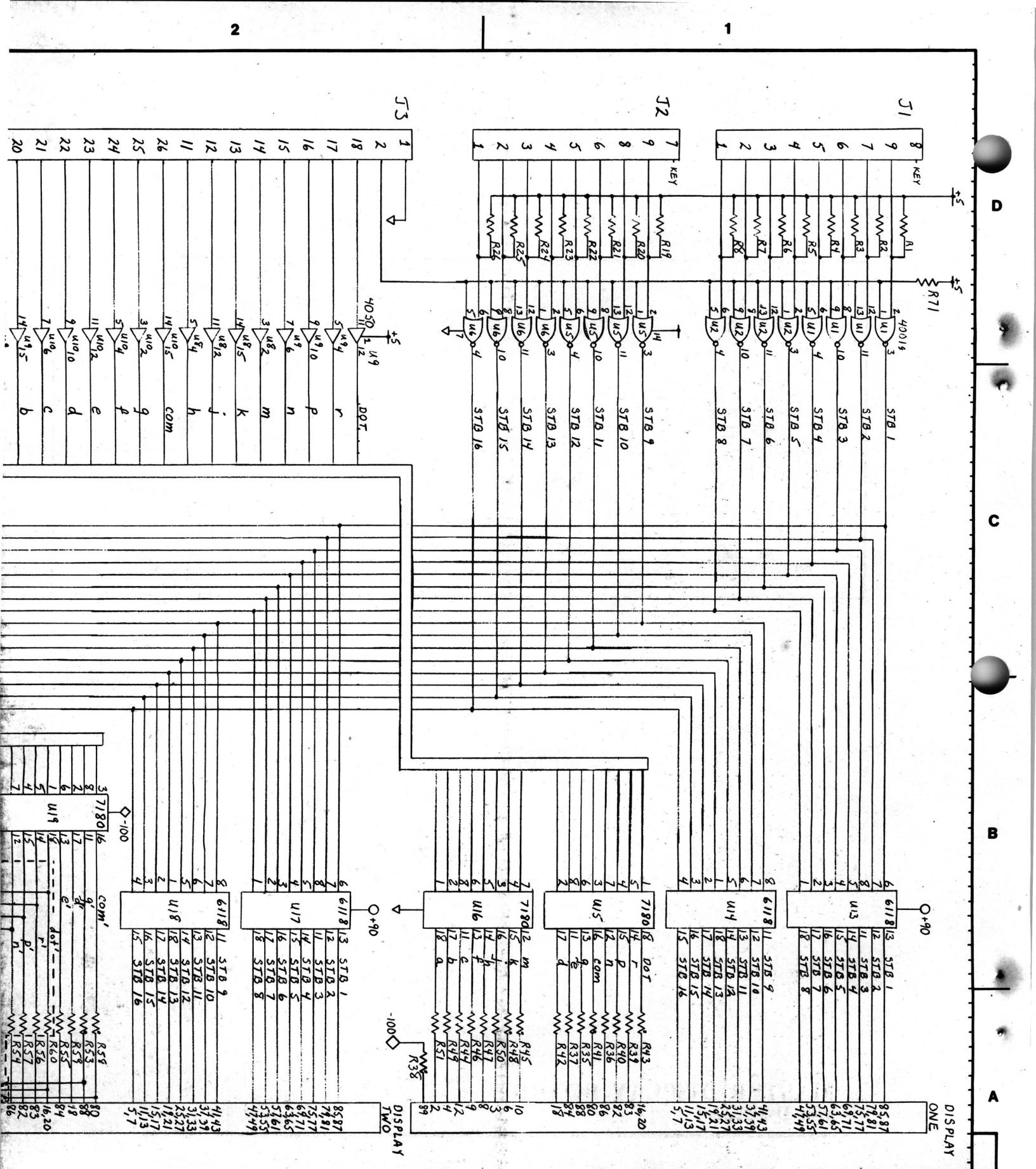

ITEM	PART NUMBER	DESCRIPTION	QTY	ITEM	PART NUMBER	DESCRIPTION	QTY

PROJ. ENGR. MARK COLDEBELLA	DO NOT SCALE WORK TO DIMENSIONS SHOWN	REMOVE BURRS – BREAK SHARP EDGES	WILLIAMS ELECTRONICS, INC.
DWN. BY M.C. DATE 3/21/88		TOLERANCES UNLESS OTHERWISE SPECIFIED	3401 N. CALIFORNIA AVE. CHICAGO IL. 60618
CHECKED BY M.C. DATE 7-29-88	FIRST PROJECT NO. 553	FRACTIONAL ±1/64 ANGULAR ±1°	NAME MASTER DISPLAY 88, SCHEMATIC
APPROVAL DATE	FIRST USAGE D-12232-	DECIMAL ±.005 FILLETS .020 MAX	SCALE 1 SHT 1 OF 1 PART NO. 16-9033 REV -1
	QTY 1	MATERIAL	

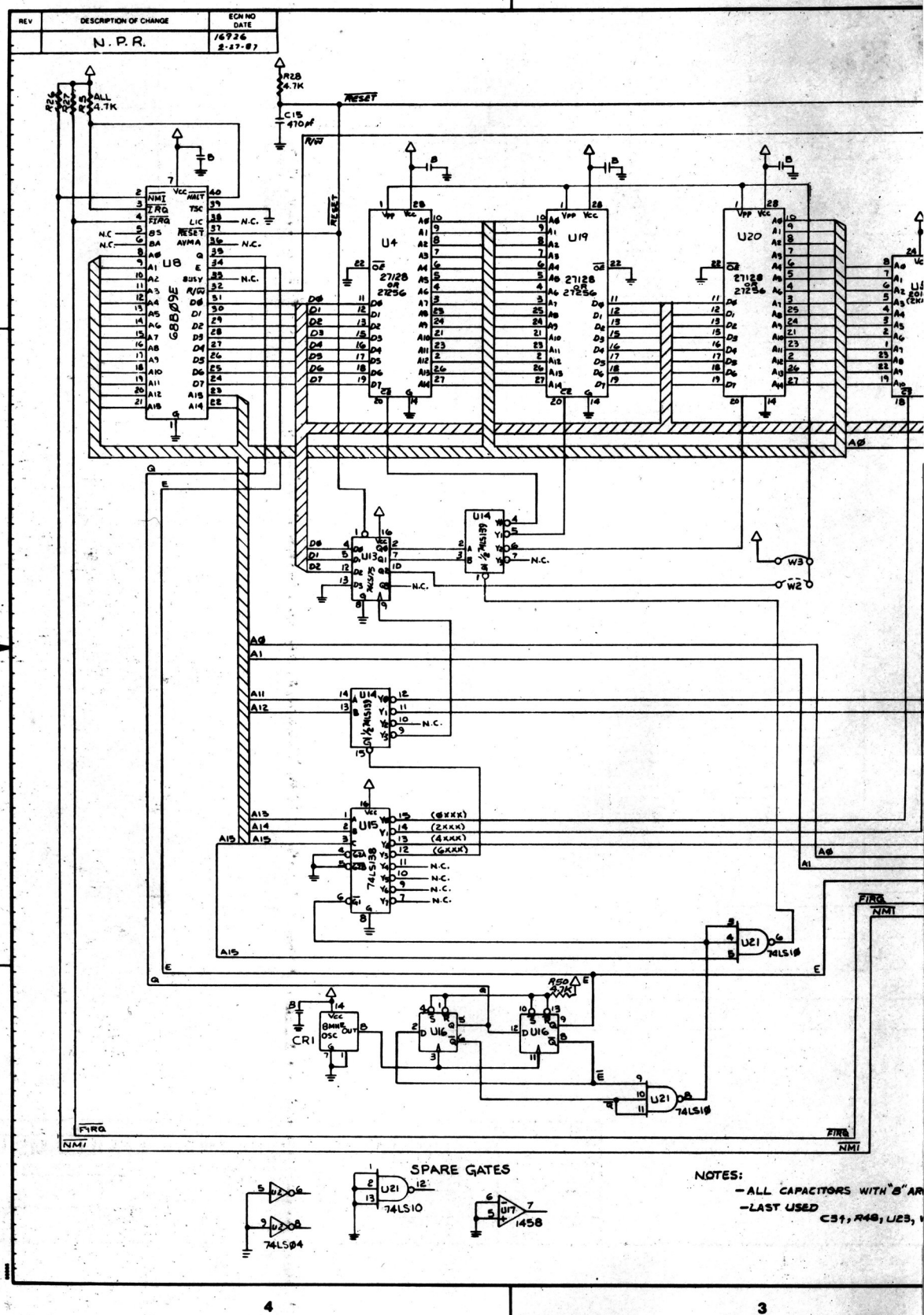

REV
DESCRIPTION OF CHANGE
ECN NO DATE
N.P.R.
16926 2-27-87
U8 68B09E
U4 27128 OR 27256
U19 27128 OR 27256
U20 27128 OR 27256
U13 74LS175
U14 74LS139
U15 74LS138
U16 8MHZ OSC
U21 74LS10
U17 1458
CR1
R28 4.7K
C15 470pf
R50 4.7K
ALL 4.7K
RESET
R/W
FIRQ
NMI
SPARE GATES
74LS04
74LS10
NOTES:
-ALL CAPACITORS WITH "B" AR
-LAST USED
C34, R48, U23,

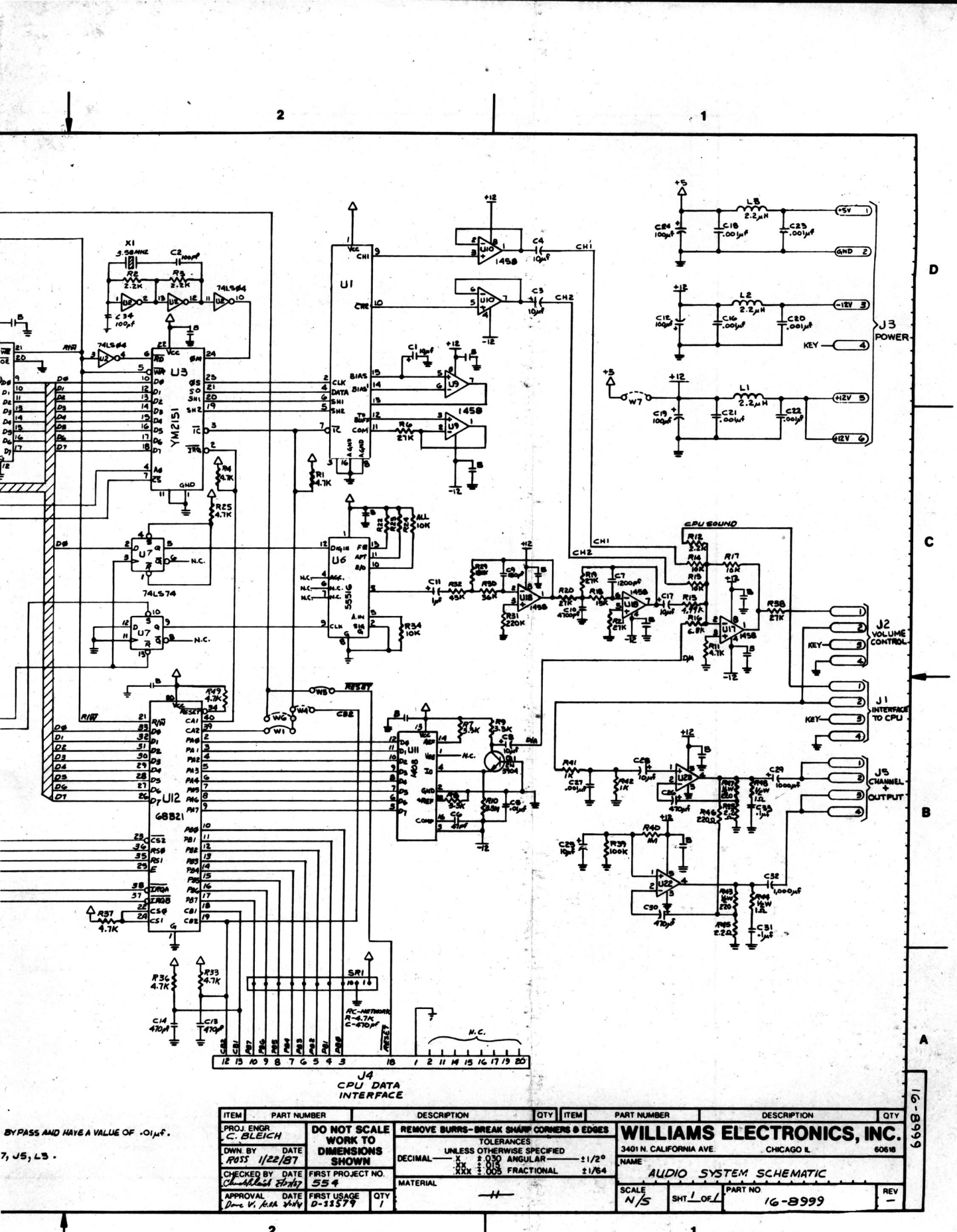

BYPASS AND HAVE A VALUE OF .01μf.

7, J5, L3.

Audio Board (D-11581) Schematic

REV	DESCRIPTION OF CHANGE	ECN NO. DATE
-	N.P.R.	17886 8-19-87
A	SEE COVER SHEET	18181 10-23-87
B	ADDED W6, W7, W8, F2A, AND F2C	18901 3-19-88

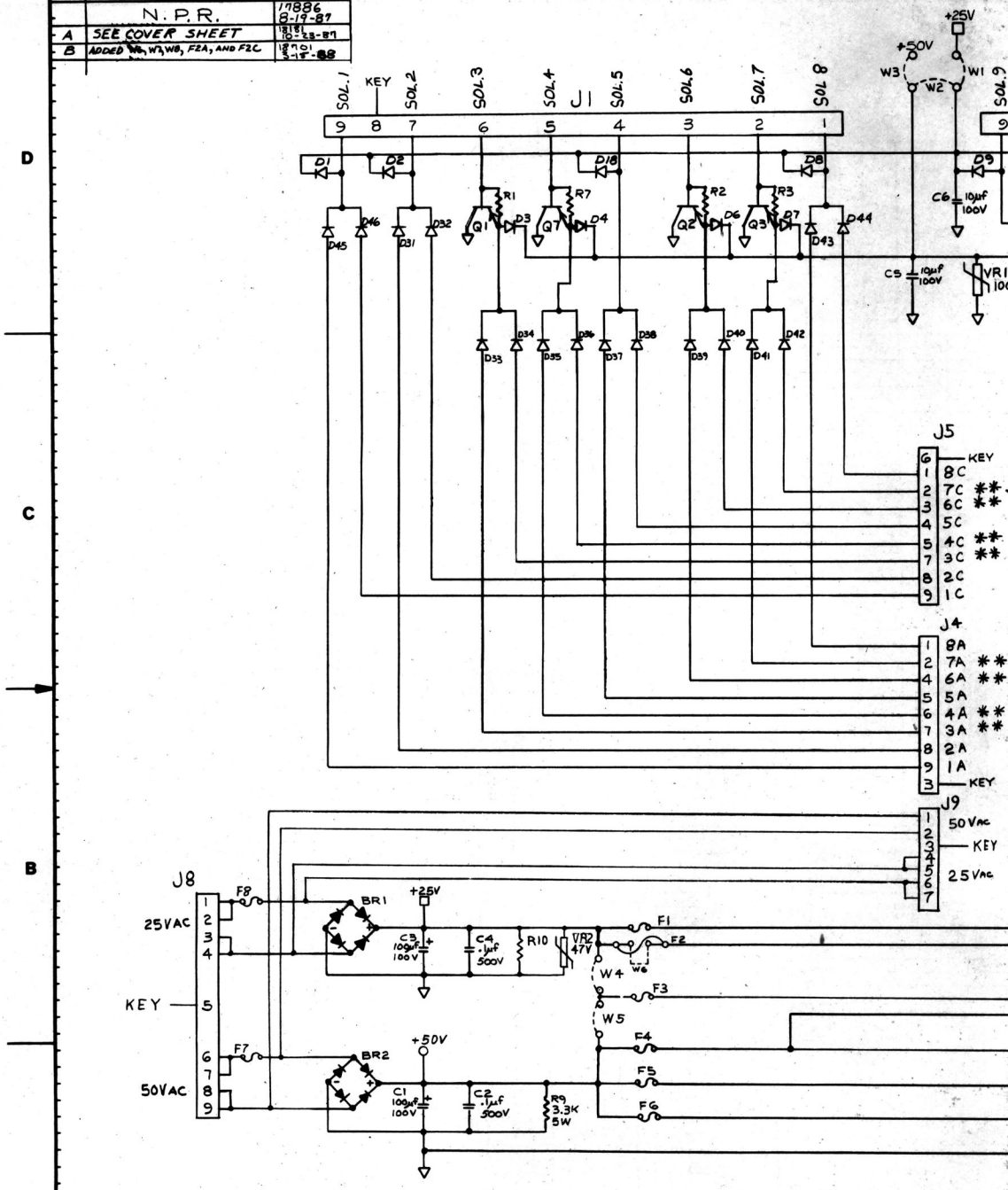

NOTES:
1. R1-R8, 220Ω 1/4 W
2. Q1-Q8, TIP-36C
3. D1-D25, IN4003
4. D31-D46, MR501
5. BR1, BR2, 35A 250V
6. W1, W3, W4 JUMPERS SELECT COMBINATION OF 25V AND 50V COILS; W2, W3, W5 JUMPERS SELECT 50V COILS.
7. F1-F8, SEE APPROPRIATE ASSEMBLY FOR FUSE VALUES (D-11813-).
8. *, 50V COILS ONLY; **, 50V COIL OR FLASH LAMP ONLY.
9. VOLTAGES SPECIFIED UNDER FULL LOAD CONDITIONS.

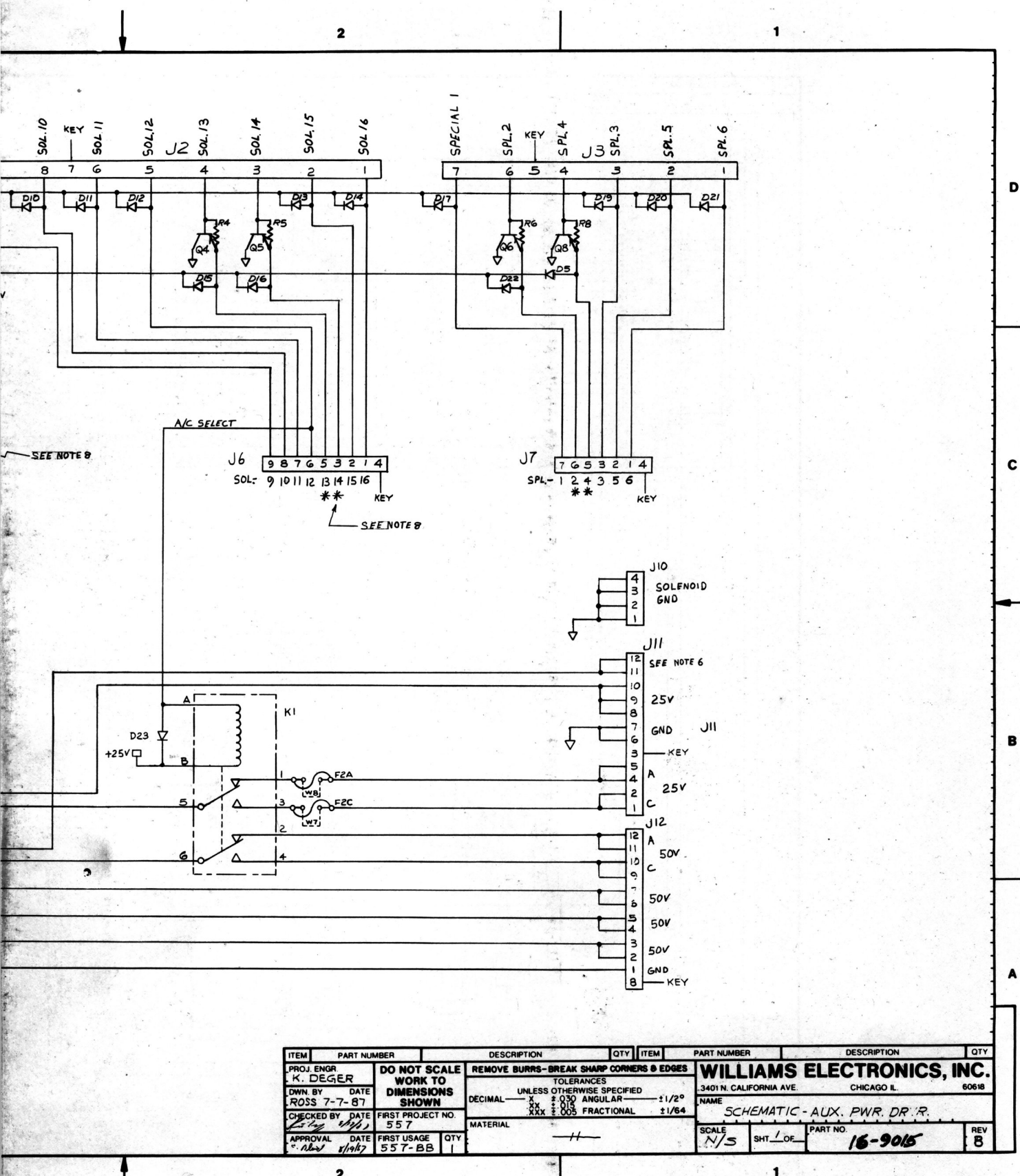

ITEM	PART NUMBER	DESCRIPTION	QTY	ITEM	PART NUMBER	DESCRIPTION	QTY

PROJ. ENGR: K. DEGER
DWN. BY: ROSS 7-7-87 DATE
CHECKED BY: DATE
APPROVAL: DATE 8/19/87

DO NOT SCALE WORK TO DIMENSIONS SHOWN

FIRST PROJECT NO. 557
FIRST USAGE 557-BB QTY 1

REMOVE BURRS-BREAK SHARP CORNERS & EDGES

TOLERANCES UNLESS OTHERWISE SPECIFIED
DECIMAL — X ±.030 ANGULAR ±1/2°
XX ±.015
XXX ±.005 FRACTIONAL ±1/64

MATERIAL —

WILLIAMS ELECTRONICS, INC.
3401 N. CALIFORNIA AVE. CHICAGO IL. 60618

NAME: SCHEMATIC - AUX. PWR. DR'. R.

SCALE N/S SHT 1 OF PART NO. 16-9015 REV 8

Aux Power Driver Board Schematic

EARTHSHAKER 84

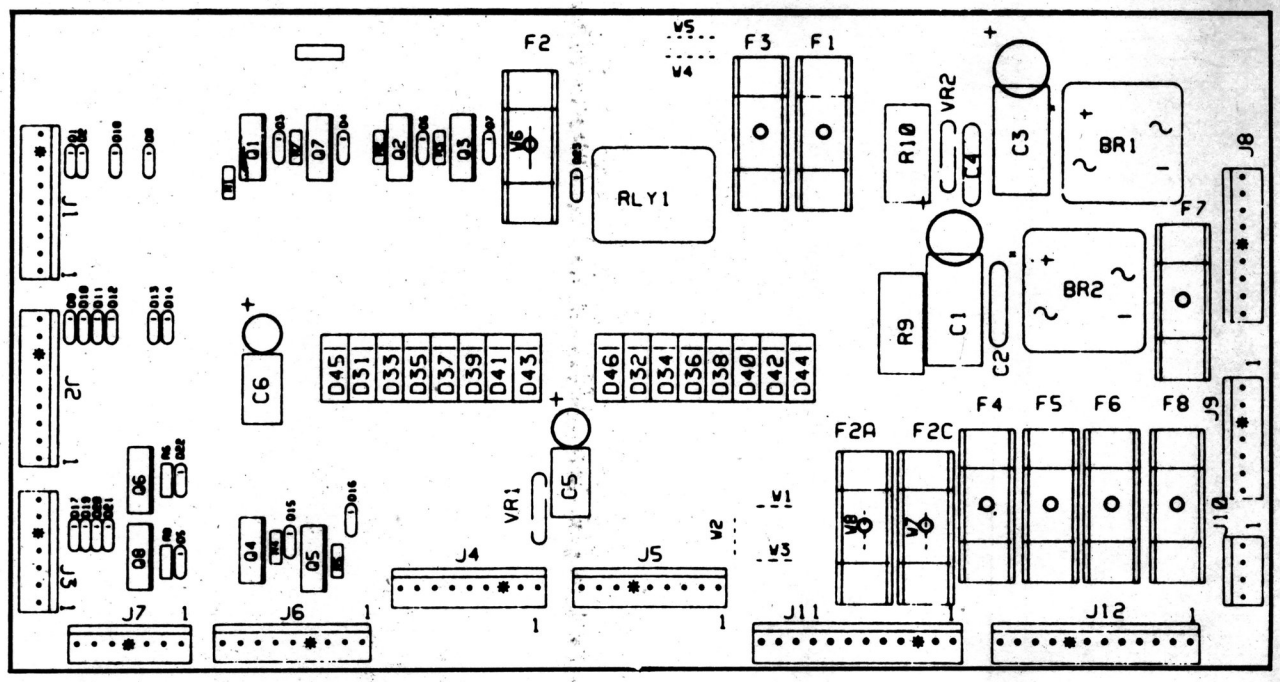

AUX POWER DRIVER UNIT BOARD
p/n D-12247

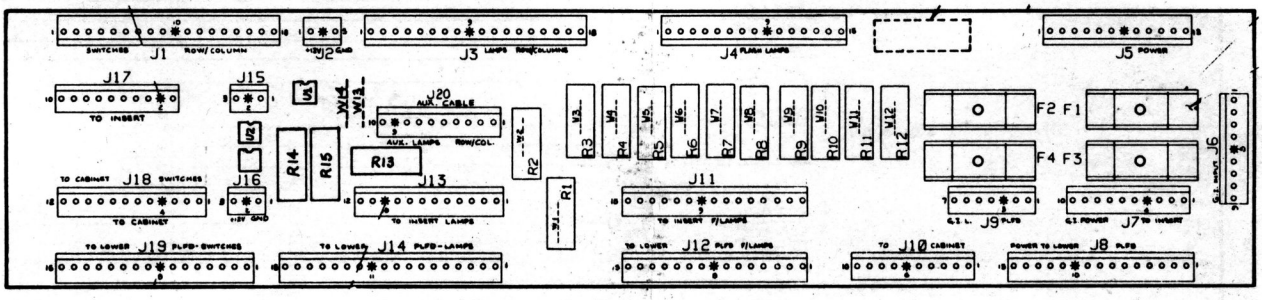

BACKBOX INTERCONNECT BOARD

p/n D-12313-568

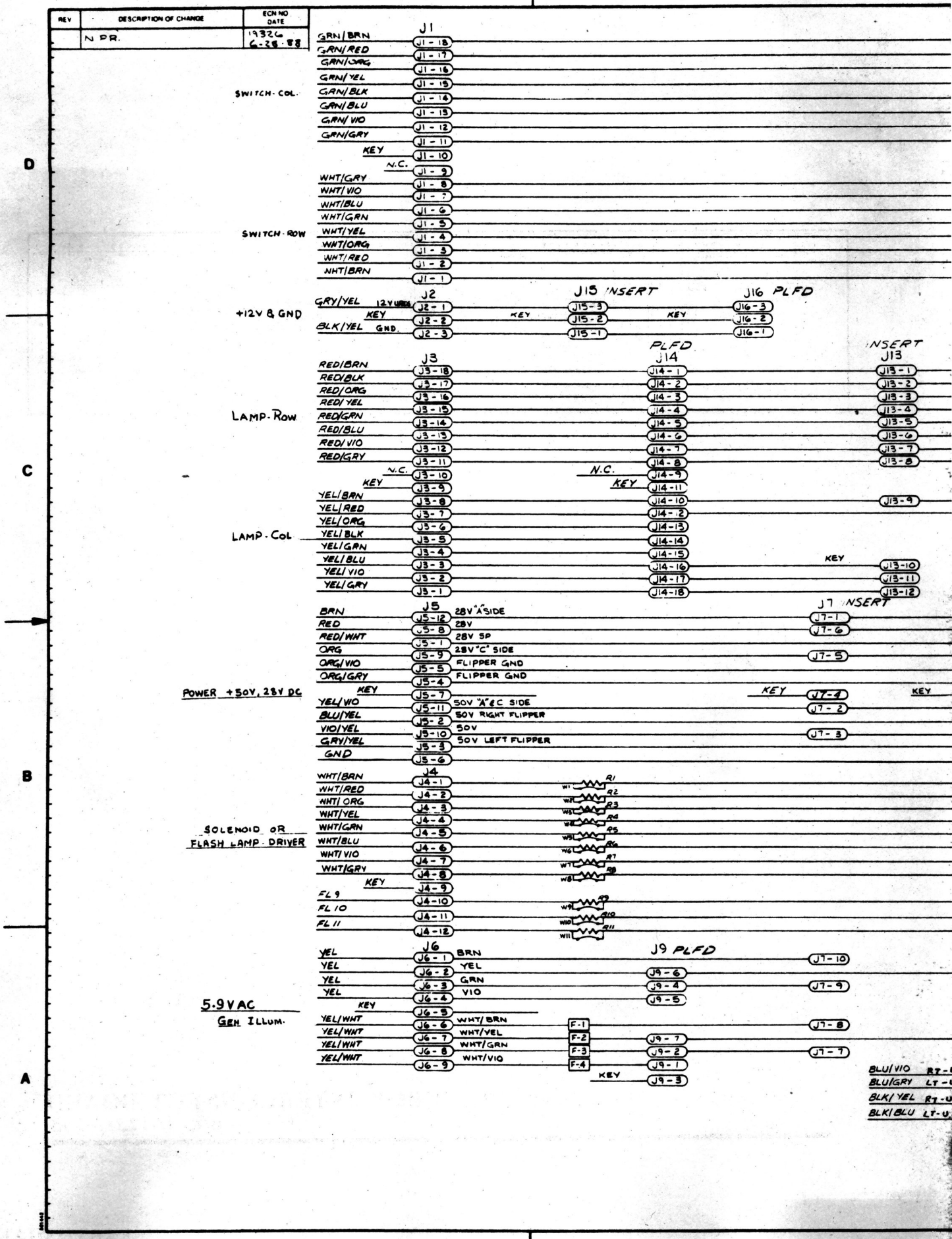
REV
DESCRIPTION OF CHANGE
ECN NO
DATE
N PR.
19326
6-28-88
J1
GRN/BRN
GRN/RED
GRN/ORG
GRN/YEL
GRN/BLK
GRN/BLU
GRN/VIO
GRN/GRY
KEY
N.C.
WHT/GRY
WHT/VIO
WHT/BLU
WHT/GRN
WHT/YEL
WHT/ORG
WHT/RED
WHT/BRN
SWITCH-COL.
SWITCH-ROW
J2
GRY/YEL
12V UNSW
KEY
BLK/YEL
GND.
+12V & GND
J15 INSERT
J16 PLFD
J3
RED/BRN
RED/BLK
RED/ORG
RED/YEL
RED/GRN
RED/BLU
RED/VIO
RED/GRY
YEL/BRN
YEL/RED
YEL/ORG
YEL/BLK
YEL/GRN
YEL/BLU
YEL/VIO
YEL/GRY
LAMP-ROW
LAMP-COL
J14 PLFD
J13 INSERT
J5
BRN
RED
RED/WHT
ORG
ORG/VIO
ORG/GRY
YEL/VIO
BLU/YEL
VIO/YEL
GRY/YEL
GND
28V "A" SIDE
28V
28V SP
28V "C" SIDE
FLIPPER GND
FLIPPER GND
50V "A" & C SIDE
50V RIGHT FLIPPER
50V
50V LEFT FLIPPER
POWER +50V, 28V DC
J7 INSERT
J4
WHT/BRN
WHT/RED
WHT/ORG
WHT/YEL
WHT/GRN
WHT/BLU
WHT/VIO
WHT/GRY
FL 9
FL 10
FL 11
R1
R2
R3
R4
R5
R6
R7
R8
R9
R10
R11
SOLENOID OR FLASH LAMP DRIVER
J6
YEL
YEL
YEL
YEL
YEL/WHT
YEL/WHT
YEL/WHT
YEL/WHT
BRN
YEL
GRN
VIO
WHT/BRN
WHT/YEL
WHT/GRN
WHT/VIO
F-1
F-2
F-3
F-4
J9 PLFD
5.9 VAC
GEN ILLUM.
BLU/VIO
BLU/GRY
BLK/YEL
BLK/BLU

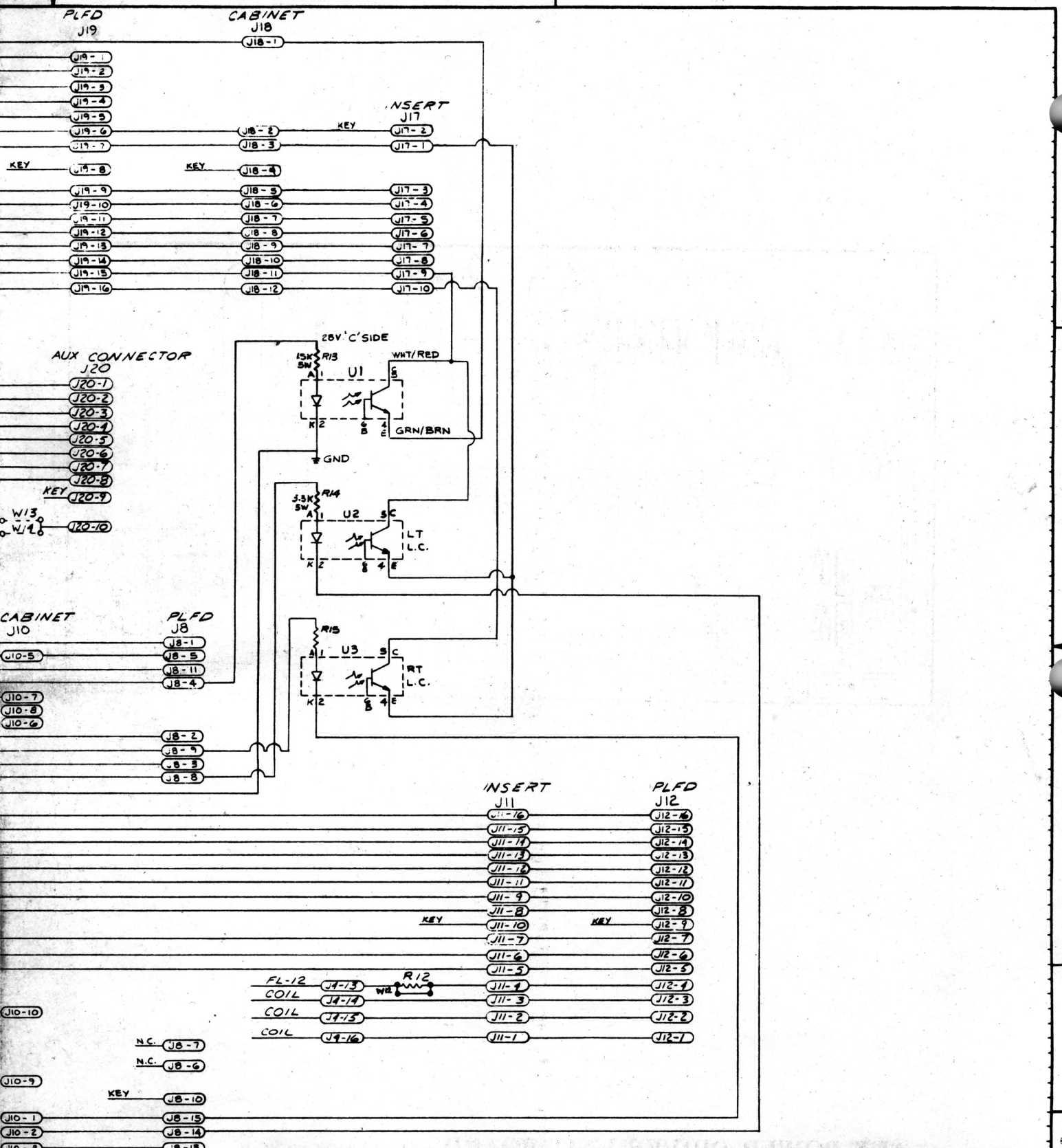

ITEM	PART NUMBER	DESCRIPTION	QTY	ITEM	PART NUMBER	DESCRIPTION	QTY

PROJ ENGR: M. JAYSWAL
DWN BY / DATE: Bm 6-28-88
CHECKED BY / DATE: 6/28/88
APPROVAL / DATE: 6/30/88
DO NOT SCALE WORK TO DIMENSIONS SHOWN
FIRST PROJECT NO: 567
FIRST USAGE: D-12313
QTY: 1

REMOVE BURRS - BREAK SHARP CORNERS & EDGES

TOLERANCES UNLESS OTHERWISE SPECIFIED
DECIMAL — X ± .030 ANGULAR ± 1/2°
XX ± .015
XXX ± .005 FRACTIONAL ± 1/64

MATERIAL —"—

WILLIAMS ELECTRONICS, INC.
3401 N CALIFORNIA AVE CHICAGO IL 60618

NAME: SCHEMATIC - INTERCONNECT BOARD.

SCALE: N/S
SHT 1 OF 1
PART NO: IG-9032-1
REV: -

IG-9032-1

Backbox Interconnect Board (D-12313-568) Schematic

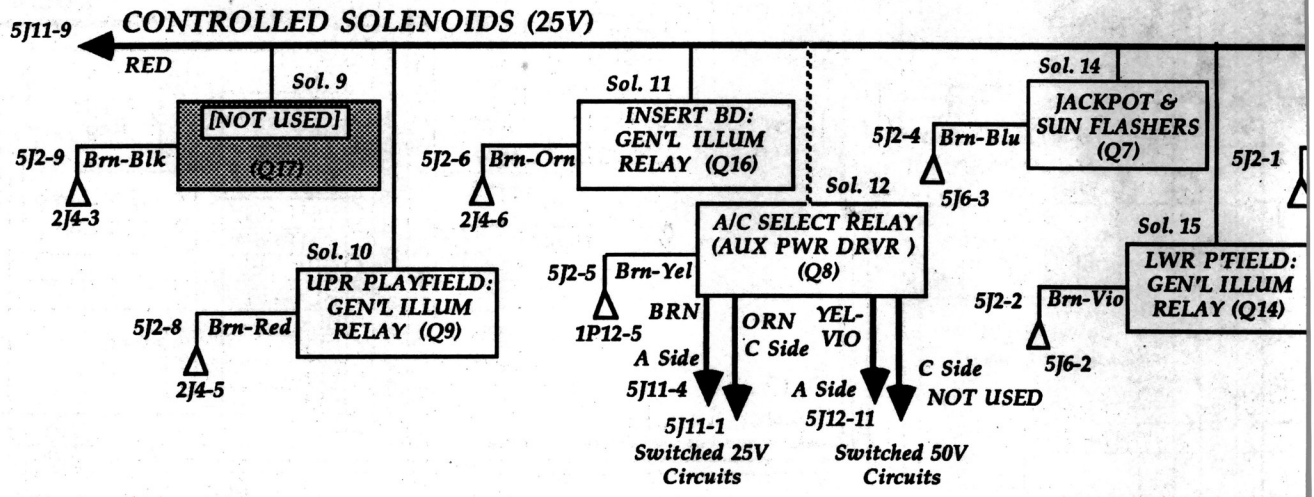
5J11-9
CONTROLLED SOLENOIDS (25V)
RED
Sol. 9
[NOT USED]
(Q17)
5J2-9
Brn-Blk
2J4-3
Sol. 10
UPR PLAYFIELD: GEN'L ILLUM RELAY (Q9)
5J2-8
Brn-Red
2J4-5
Sol. 11
INSERT BD: GEN'L ILLUM RELAY (Q16)
5J2-6
Brn-Orn
2J4-6
Sol. 12
A/C SELECT RELAY (AUX PWR DRVR) (Q8)
5J2-5
Brn-Yel
1P12-5
BRN
A Side
5J11-4
5J11-1
Switched 25V Circuits
ORN
C Side
YEL-VIO
A Side
5J12-11
Switched 50V Circuits
C Side
NOT USED
Sol. 14
JACKPOT & SUN FLASHERS (Q7)
5J2-4
Brn-Blu
5J6-3
Sol. 15
LWR P'FIELD: GEN'L ILLUM RELAY (Q14)
5J2-2
Brn-Vio
5J6-2
5J2-1

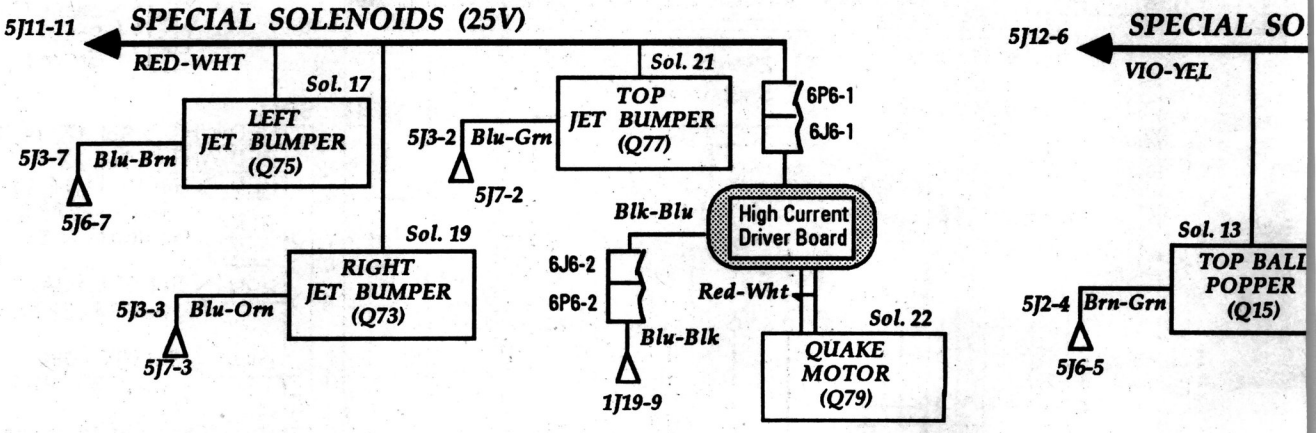
5J11-11
SPECIAL SOLENOIDS (25V)
RED-WHT
Sol. 17
LEFT JET BUMPER (Q75)
5J3-7
Blu-Brn
5J6-7
Sol. 19
RIGHT JET BUMPER (Q73)
5J3-3
Blu-Orn
5J7-3
Sol. 21
TOP JET BUMPER (Q77)
5J3-2
Blu-Grn
5J7-2
6P6-1
6J6-1
Blk-Blu
High Current Driver Board
6J6-2
6P6-2
Red-Wht
Blu-Blk
1J19-9
Sol. 22
QUAKE MOTOR (Q79)
5J12-6
SPECIAL SO
VIO-YEL
Sol. 13
TOP BALL POPPER (Q15)
5J2-4
Brn-Grn
5J6-5

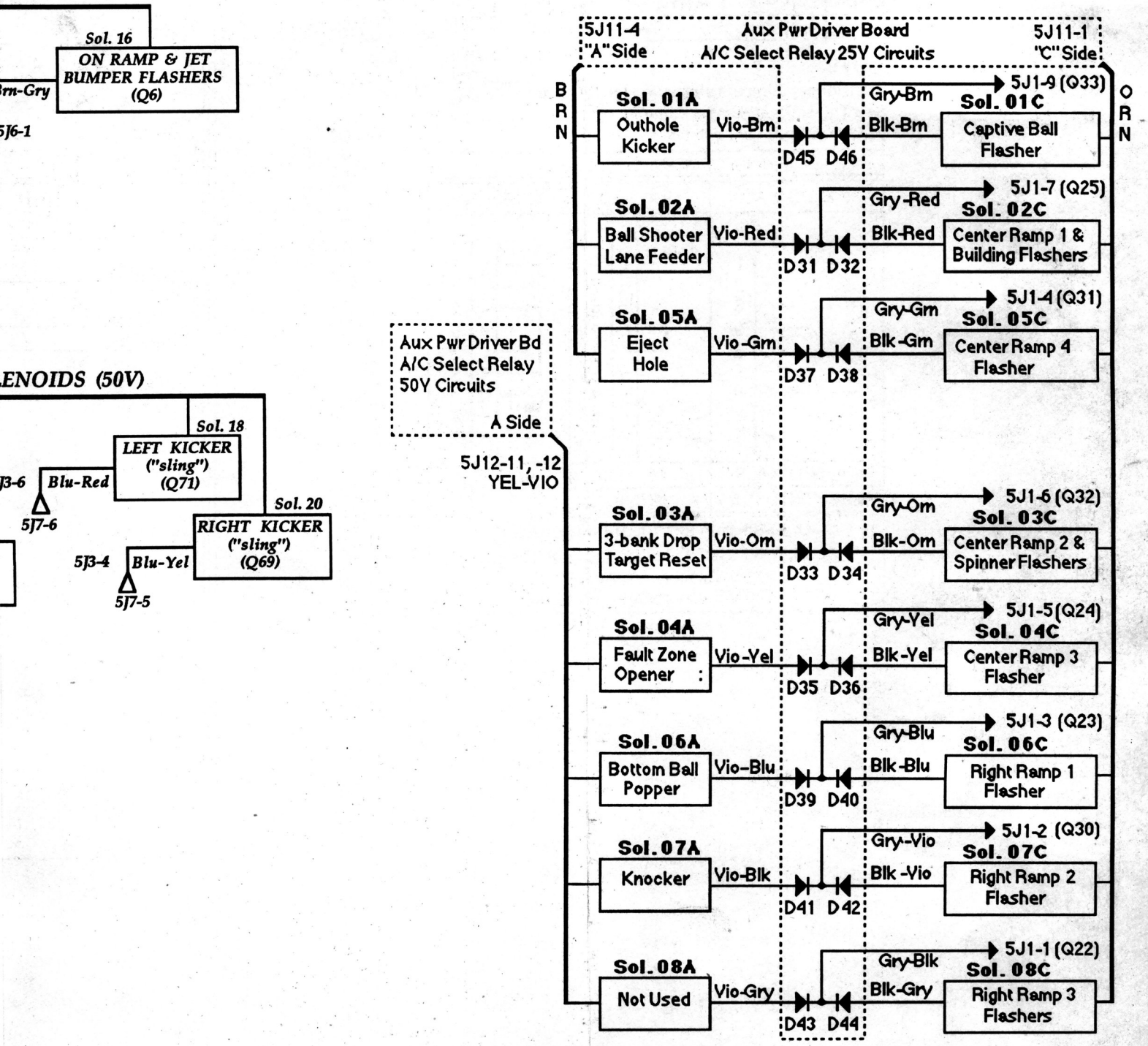

CONTROLLED, SPECIAL, & SWITCHED SOLENOIDS

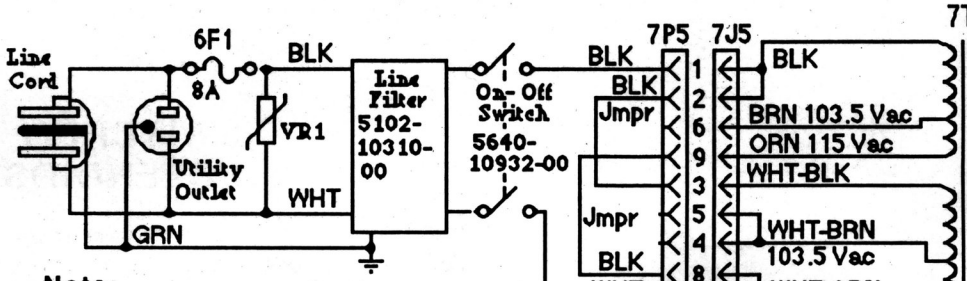

7T1: p/n A-5610-12136

WHT 88.5 Vac WHT

GRY 9.7 Vac GRY-WHT

9.7 Vac GRY-GRN

BLU-WHT 13.5 Vac BLU-WHT

WHT-RED 26 Vac WHT-RED

BLK-YEL 48 Vac BLK-YEL

YEL 5.9 Vac YEL-WHT

Note:

Transformer Jumpers shown are for 115 V ac. See Transformer Jumper Chart for other voltage jumper connections.

TRANSFORMER JUMPER CHART		
206/218 V AC	230 V AC	103.5 V AC
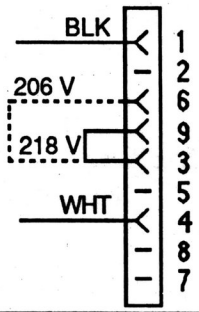	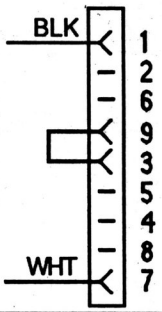	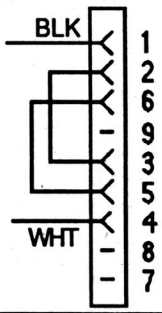
Fuse (6F1): 4A, S-B	4A, S-B	8A, N-B
Varistor (VR1):275 V	275 V	130 V

4A, S-B Fuse: 5731-06314-00 (for 220 V)
8A, N-B Fuse: 5731-09252-00 (for 115 V)
275 V Varistor: 5017-09063-00
130 V Varistor: 5017-09044-00

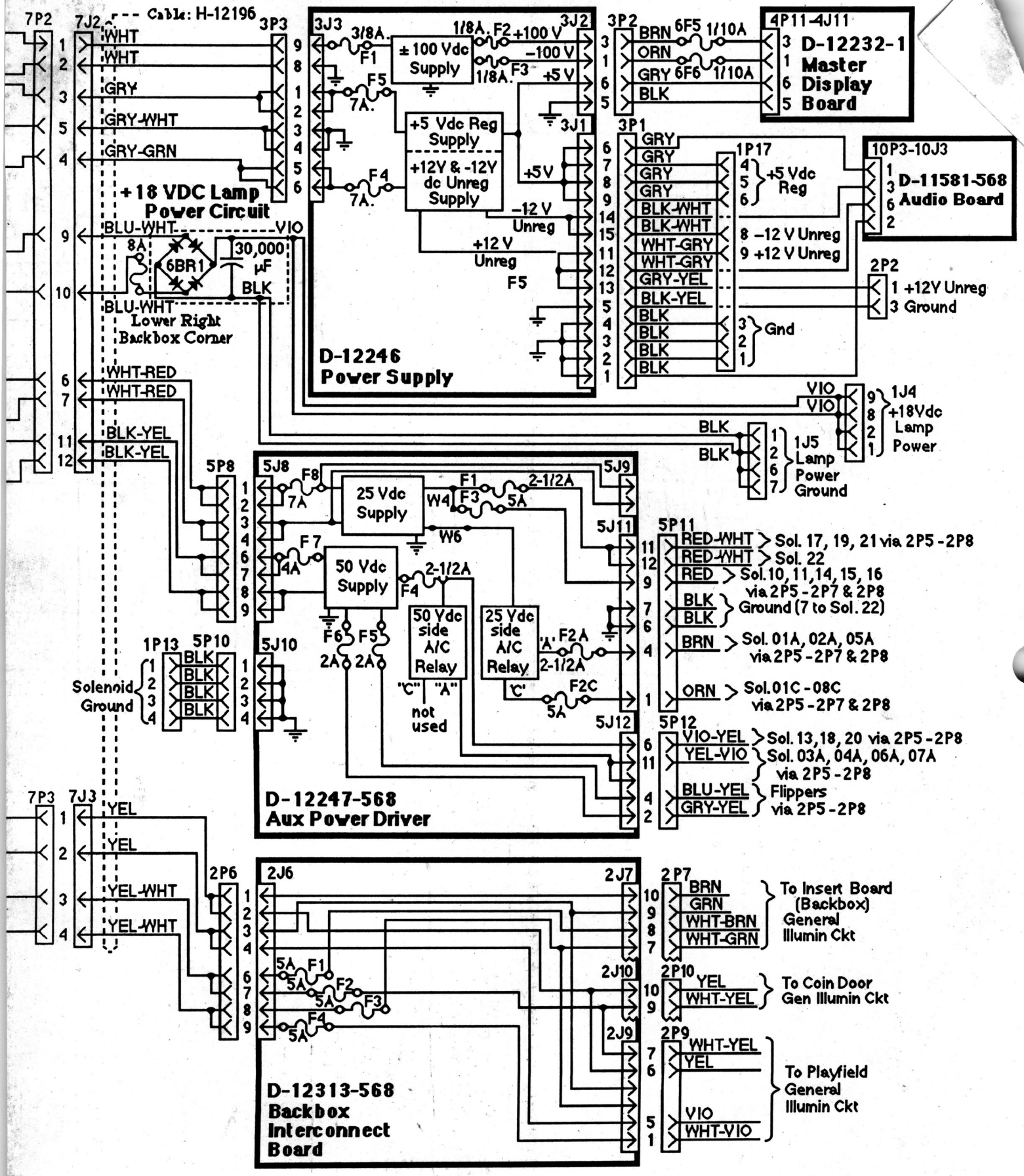
Cable: H-12196
+18 VDC Lamp Power Circuit
D-12246 Power Supply
D-12247-568 Aux Power Driver
D-12313-568 Backbox Interconnect Board
D-12232-1 Master Display Board
D-11581-568 Audio Board
± 100 Vdc Supply
+5 Vdc Reg Supply
+12V & -12V dc Unreg Supply
25 Vdc Supply
50 Vdc Supply
50 Vdc side A/C Relay
25 Vdc side A/C Relay
+5 Vdc Reg
+18Vdc Lamp Power
Lamp Power Ground
Solenoid Ground
Lower Right Backbox Corner
30,000 µF
Sol. 17, 19, 21 via 2P5 - 2P8
Sol. 22
Sol.10, 11, 14, 15, 16 via 2P5 - 2P7 & 2P8
Ground (7 to Sol. 22)
Sol. 01A, 02A, 05A via 2P5 - 2P7 & 2P8
Sol.01C - 08C via 2P5 - 2P7 & 2P8
Sol. 13, 18, 20 via 2P5 - 2P8
Sol. 03A, 04A, 06A, 07A via 2P5 - 2P8
Flippers via 2P5 - 2P8
To Insert Board (Backbox) General Illumin Ckt
To Coin Door Gen Illumin Ckt
To Playfield General Illumin Ckt

POWER WIRING DIAGRAM

INTERCONNECT BOARD INTERBOARD SIGNALS

Connector	Wire Color	Signal Designation/Description
2J1-1	WHT/BRN	Switch Row 1
2J1-2	WHT/RED	Switch Row 2
2J1-3	WHT/ORG	Switch Row 3
2J1-4	WHT/YEL	Switch Row 4
2J1-5	WHT/GRN	Switch Row 5
2J1-6	WHT/BLU	Switch Row 6
2J1-7	WHT/VIO	Switch Row 7
2J1-8	WHT/GRY	Switch Row 8
2J1-9	Key Pin	No Connection
2J1-10	---	No Connection
2J1-11	GRN-GRY	Switch Col 8 (Q46)
2J1-12	GRN-VIO	Switch Col 7 (Q42)
2J1-13	GRN-BLU	Switch Col 6 (Q47)
2J1-14	GRN-BLK	Switch Col 5 (Q43)
2J1-15	GRN-YEL	Switch Col 4 (Q48)
2J1-16	GRN-ORG	Switch Col 3 (Q44)
2J1-17	GRN-RED	Switch Col 2 (Q49)
2J1-18	GRN-BRN	Switch Col 1 (Q45)
2J4-1	WHT/BRN	Solenoid 01C
2J4-2	WHT/RED	Solenoid 02C
2J4-3	WHT/ORG	Solenoid 03C
2J4-4	WHT/YEL	Solenoid 04C
2J4-5	WHT/GRN	Solenoid 05C
2J4-6	WHT/BLU	Solenoid 06C
2J4-7	WHT/VIO	Solenoid 07C
2J4-8	WHT/GRY	Solenoid 08C
2J4-9	Key Pin	No Connection
2J4-10	BRN/BLK	Solenoid 15
2J4-11	BRN/ORN	Solenoid 16
2J4-12	BRN/RED	Solenoid 9
2J4-13	BRN/VIO	Solenoid 10
2J4-14	BRN/GRY	Solenoid 11
2J4-15	---	No Connection
2J4-16	---	No Connection
2J6-1	YEL	Transformer: 6V ac
2J6-2	YEL	Transformer: 6V ac
2J6-3	YEL	Transformer: 6V ac
2J6-4	YEL	Transformer: 6V ac
2J6-5	Key Pin	No Connection
2J6-6	YEL/WHT	Transformer: 6V ac
2J6-7	YEL/ WHT	Transformer: 6V ac
2J6-8	YEL/WHT	Transformer: 6V ac
2J6-9	YEL/WHT	Transformer: 6V ac
2J8-1	BRN	+25 Vdc / Sol. Power "A"
2J8-2	YEL/VIO	+50 Vdc / Sol. Power "A"
2J8-3	VIO/YEL	+50 Vdc / Sol. Power
2J8-4	ORG	+25 Vdc / Sol. Power "C"
2J8-5	RED	+25 Vdc / Sol.Power
2J8-6	---	No Connection
2J8-7	---	No Connection
2J8-8	GRY/YEL	+50 Vdc / Flippers
2J8-9	BLU/YEL	+50 Vdc / Flippers
2J8-10	Key Pin	No Connection
2J8-11	RED/WHT	+50 Vdc / Sol. Power
2J8-12	---	No Connection
2J8-13	---	No Connection
2J8-14	BLU/GRY	Lwr L Flipper Switch, LPF
2J8-15	BLU/VIO	Lwr R Flipper Switch, LPF
2J10-1	BLU/VIO	Lwr R Flipper Switch, LPF
2J10-2	BLU/GRY	Lwr L Flipper Switch, LPF
2J10-3	---	No Connection
2J10-4	---	No Connection
2J10-5	RED	
2J10-6	Key Pin	No Connection
2J10-7	ORN/VIO	
2J10-8	ORN/GRY	
2J10-9	WHT/YEL	Gen Illum Power: 6V ac
2J10-10	YEL	Transformer: 6V ac

Connector	Wire Color	Signal Designation/Description
2J2-1	GRY/YEL	CPU Power: +12 Vdc Unreg
2J2-2	Key Pin	No Connection
2J2-3	BLK/YEL	Logic Ground
2J3-1	YEL/GRY	Lamp Col 8 (Q51/52)
2J3-2	YEL /VIO	Lamp Col 7 (Q53/54)
2J3-3	YEL/BLU	Lamp Col 6 (Q55/56)
2J3-4	YEL/GRN	Lamp Col 5 (Q57/58)
2J3-5	YEL/BLK	Lamp Col 4 (Q59/60)
2J3-6	YEL/ORG	Lamp Col 3 (Q61/62)
2J3-7	YEL/RED	Lamp Col 2 (Q63/64)
2J3-8	YEL/BRN	Lamp Col 1 (Q65/66)
2J3-9	Key Pin	No Connection
2J3-10	---	No Connection
2J3-11	RED/GRY	Lamp Row 8 (Q87)
2J3-12	RED/VIO	Lamp Row 7 (Q86)
2J3-13	RED/BLU	Lamp Row 6 (Q85)
2J3-14	RED/GRN	Lamp Row 5 (Q84)
2J3-15	RED/YEL	Lamp Row 4 (Q83)
2J3-16	RED/ORG	Lamp Row 3 (Q82)
2J3-17	RED/BLK	Lamp Row 2 (Q81)
2J3-18	RED/BRN	Lamp Row 1 (Q80)
2J5-1	RED/WHT	+50 Vdc / Sol. Power
2J5-2	BLU/YEL	+50 Vdc / Flippers
2J5-3	GRY/YEL	+50 Vdc / Flippers
2J5-4	ORG/GRY	Flipper Ground
2J5-5	ORG/VIO	Flipper Ground
2J5-6	BLK	
2J5-7	Key Pin	No Connection
2J5-8	RED	+25 Vdc / Sol.Power
2J5-9	ORG	+25 Vdc / Sol. Power "C"
2J5-10	VIO/YEL	+50 Vdc / Sol. Power
2J5-11	YEL/VIO	+50 Vdc / Sol. Power "A"
2J5-12	BRN	+25 Vdc / Sol. Power "A"
2J7-1	---	No Connection
2J7-2	---	No Connection
2J73	---	No Connection
2J7-4	Key Pin	No Connection
2J7-5	ORG	+25 Vdc / Sol. Power "C"
2J7-6	RED	+25 Vdc / Sol. Power
2J7-7	WHT/GRN	Solenoid 05C
2J7-8	WHT/BRN	Solenoid 01
2J7-9	GRN	Gen Illum Power: 6V ac
2J7-10	BRN	+25 Vdc / Sol. Power "A"
2J9-1	WHT/VIO	Gen Illum Power: 6V ac
2J9-2	---	No Connection
2J9-3	Key Pin	No Connection
2J9-4	---	No Connection
2J9-5	VIO	Gen Illum Power: 6V ac
2J9-6	YEL	Transformer: 6V ac
2J9-7	WHT/YEL	Gen Illum Power: 6V ac
2J11-1	---	No Connection
2J11-2	---	No Connection
2J11-3	---	No Connection
2J11-4	---	No Connection
2J11-5	BRN/RED	Solenoid 10
2J11-6	BRN/ORN	Solenoid 11
2J11-7	BRN/BLK	Solenoid 9
2J11-8	BLK/GRY	Solenoid 07C
2J11-9	BLK/VIO	Solenoid 15
2J11-10	Key Pin	No Connection
2J11-11	BLK/BLU	Solenoid 06C
2J11-12	BLK/GRN	Solenoid 05C
2J11-13	BLK/YEL	Solenoid 04C
2J11-14	BLK/ORG	Solenoid 03C
2J11-15	BLK/RED	Solenoid 02C
2J11-16	BLK-BRN	Solenoid 01C

INTERCONNECT BOARD INTE

(Continued

Connector	Wire Color	Signal Designation/Description
2J12-1	---	No Connection
2J12-2	---	No Connection
2J12-3	BRN/GRY	Solenoid 16
2J12-4	BRN/VIO	Solenoid 15
2J12-5	BRN/RED	Solenoid 10
2J12-6	---	No Connection
2J12-7	BRN/BLK	Solenoid 9
2J12-8	BLK/GRY	Solenoid 08C
2J12-9	Key Pin	No Connection
2J12-10	BLK/VIO	Solenoid 07C
2J12-11	BLK/BLU	Solenoid 06C
2J12-12	---	No Connection
2J12-13	BLK/YEL	Solenoid 04C
2J12-14	BLK/ORG	Solenoid 03C
2J12-15	BLK/RED	Solenoid 02C
2J12-16	BLK/BRN	Solenoid 01C
2J14-1	RED/BRN	Lamp Row 1 (Q80)
2J14-2	RED/BLK	Lamp Row 2 (Q81)
2J14-3	RED/ORG	Lamp Row 3 (Q82)
2J14-4	RED/YEL	Lamp Row 4 (Q83)
2J14-5	RED/GRN	Lamp Row 5 (Q84)
2J14-6	RED/BLU	Lamp Row 6 (Q85)
2J14-7	RED/VIO	Lamp Row 7 (Q86)
2J14-8	RED/GRY	Lamp Row 8 (Q87)
2J14-9	---	No Connection
2J14-10	YEL/BRN	Lamp Col 1 (Q65/66)
2J14-11	Key Pin	No Connection
2J14-12	YEL/RED	Lamp Col 2 (Q63/64)
2J14-13	YEL/ORG	Lamp Col 3 (Q61/62)
2J14-14	YEL/BLK	Lamp Col 4 (Q59/60)
2J14-15	YEL/GRN	Lamp Col 5 (Q57/58)
2J14-16	YEL/BLU	Lamp Col 6 (Q55/56)
2J14-17	YEL/VIO	Lamp Col 7 (Q53/54)
2J14-18	---	No Connection
2J19-1	GRN/RED	Switch Col 2 (Q49)
2J19-2	GRN/ORG	Switch Col 3 (Q44)
2J19-3	GRN/YEL	Switch Col 4 (Q48)
2J19-4	GRN/BLK	Switch Col 5 (Q43)
2J19-5	GRN/BLU	Switch Col 6 (Q47)
2J19-6	GRN/VIO	Switch Col 7 (Q42)
2J19-7	GRN/GRY	Switch Col 8 (Q46)
2J19-8	Key Pin	No Connection
2J19-9	WHT/GRY	Switch Row 8
2J19-10	WHT/VIO	Switch Row 7
2J19-11	WHT/BLU	Switch Row 6
2J19-12	WHT/GRN	Switch Row 5
2J19-13	WHT/YEL	Switch Row 4
2J19-14	WHT/ORG	Switch Row 3
2J19-15	WHT/RED	Switch Row 2
2J19-16	WHT/BRN	Switch Row 1

RBOARD SIGNALS

Connector	Wire Color	Signal Designation/Description
2J13-1	RED/BRN	Lamp Row 1 (Q80)
2J13-2	RED/BLK	Lamp Row 2 (Q81)
2J13-3	RED/ORG	Lamp Row 3 (Q82)
2J13-4	RED/YEL	Lamp Row 4 (Q83)
2J13-5	RED/GRN	Lamp Row 5 (Q84)
2J13-6	RED/BLU	Lamp Row 6 (Q85)
2J13-7	RED/VIO	Lamp Row 7 (Q86)
2J13-8	RED/GRY	Lamp Row 8 (Q87)
2J13-9	---	No Connection
2J13-10	Key Pin	No Connection
2J13-11	---	No Connection
2J13-12	YEL/GRY	Lamp Col 8 (Q51/52)
2J15	Not Applicable	
2J16-1	BLK/YEL	Logic Ground
2J16-2	Key Pin	No Connection
2J16-3	GRY/YEL	CPU: Power: +12 Vdc Unreg
2J17-1	GRN/GRY	Switch Col 8 (Q46)
2J17-2	Key Pin	No Connection
2J17-3 thru 2J17-7	---	No Connection
2J17-8	WHT/ORG	Switch Row 3
2J17-9	---	No Connection
2J17-10	---	No Connection
2J18-1	GRN/BRN	Switch Col 1 (Q45)
2J18-2	---	No Connection
2J18-3	---	No Connection
2J18-4	Key Pin	No Connection
2J18-5	WHT/GRY	Switch Row 8
2J18-6	WHT/VIO	Switch Row 7
2J18-7	WHT/BLU	Switch Row 6
2J18-8	WHT/GRN	Switch Row 5
2J18-9	WHT/YEL	Switch Row 4
2J18-10	WHT/ORG	Switch Row 3
2J18-11	---	No Connection
2J18-12	WHT/BRN	Switch Row 1
2J20	Not Applicable	

AUX POWER DRIVER INTERBOARD SIGNALS

Connector	Wire Color	Signal Designation/Description
5J1-1	GRY/BLK	CPU: Solenoid 8 (Q22) / 1J11-9
5J1-2	GRY/VIO	CPU: Solenoid 7 (Q30) / 1J11-8
5J1-3	GRY/BLU	CPU: Solenoid 6 (Q23) / 1J11-7
5J1-4	GRY/GRN	CPU: Solenoid 5 (Q31) / 1J11-6
5J1-5	GRY/YEL	CPU: Solenoid 4 (Q24) / 1J11-5
5J1-6	GRY/ORG	CPU: Solenoid 3 (Q32) / 1J11-4
5J1-7	GRY/RED	CPU: Solenoid 2 (Q25) / 1J11-3
5J1-8	Key Pin	No Connection
5J1-9	GRY/BRN	CPU: Solenoid 1 (Q33) / 1J11-1
5J3-1	BLU/BLK	CPU: Spl Solnd 6 (Q79) / 1J19-9
5J3-2	BLU/GRN	CPU: Spl Solnd 5 (Q77) / 1J19-8
5J3-3	BLU/ORN	CPU: Spl Solnd 3 (Q73) / 1J19-3
5J3-4	BLU/YEL	CPU: Spl Solnd 4 (Q69) / 1J19-6
5J3-5	Key Pin	No Connection
5J3-6	BLU/RED	CPU: Spl Solnd 2 (Q71) / 1J19-4
5J3-7	BLU/BRN	CPU: Spl Solnd 1 (Q75) / 1J19-7
5J5-1	WHT/GRY	Solenoid 08C
5J5-2	WHT/VIO	Solenoid 07C
5J5-3	WHT/BLU	Solenoid 06C
5J5-4	WHT/GRN	Solenoid 05C
5J5-5	WHT/YEL	Solenoid 04C
5J5-6	Key Pin	No Connection
5J5-7	WHT/ORN	Solenoid 03C
5J5-8	WHT/RED	Solenoid 02C
5J5-9	WHT/BRN	Solenoid 01C
5J7-1	BLU/BLK	Spl Solnd 6
5J7-2	BLU/GRN	Spl Solnd 5
5J7-3	BLU/ORN	Spl Solnd 4
5J7-4	Key Pin	No Connection
5J7-5	BLU/YEL	Spl Solnd 3
5J7-6	BLU/RED	Spl Solnd 2
5J7-7	BLU/BRN	Spl Solnd 1
5J9-1	—	No Connection
5J9-2	—	No Connection
5J9-3	Key Pin	No Connection
5J9-4	WHT/BLU	25 Vac: Ferris Wheel Motor
5J9-5	—	No Connection
5J9-6	WHT/BLU	25 Vac: Ferris Wheel Motor
5J9-7	—	No Connection
5J12-1	—	No Connection
5J12-2	GRY/YEL	+50 Vdc / Flippers
5J12-3	—	No Connection
5J12-4	BLU/YEL	+50 Vdc / Flippers
5J12-5	—	No Connection
5J12-6	VIO/YEL	+50 Vdc / Sol. 18 & 20
5J12-7	—	No Connection
5J12-8	Key Pin	No Connection
5J12-9	—	No Connection
5J12-10	—	No Connection
5J12-11	YEL/VIO	+50 Vdc (A solnd) / Sol. 03A, 04A, &
5J12-12	—	No Connection

Connector	Wire Color	Signal Designation/Description
5J2-1	BRN/GRY	CPU: Solenoid 16 (Q6) / 1J12-9
5J2-2	BRN/VIO	CPU: Solenoid 15 (Q14) / 1J12-8
5J2-3	---	No Connection
5J2-4	---	No Connection
5J2-5	BRN/YEL	CPU: Solenoid 12 (Q15) / 1J12-5
5J2-6	BRN/ORG	CPU: Solenoid 11 (Q16) / 1J12-4
5J2-7	Key Pin	No Connection
5J2-8	BRN/RED	CPU: Solenoid 10 (Q9) / 1J12-2
5J2-9	BRN/BLK	CPU: Solenoid 9 (Q17) / 1J12-1
5J4-1	VIO/GRY	Solenoid 08A
5J4-2	VIO/BLK	Solenoid 07A
5J4-3	Key Pin	No Connection
5J4-4	VIO/BLU	Solenoid 06A
5J4-5	VIO/GRN	Solenoid 05A
5J4-6	VIO/YEL	Solenoid 04A
5J4-7	VIO/ORN	Solenoid 03A
5J4-8	VIO/RED	Solenoid 02A
5J4-9	VIO/BRN	Solenoid 01A
5J6-1	BRN/GRY	Solenoid 16
5J6-2	BRN/VIO	Solenoid 15
5J6-3	BRN/BLU	Solenoid 14
5J6-4	Key Pin	No Connection
5J6-5	—	Solenoid 13
5J6-6	—	Solenoid 12
5J6-7	BRN/ORN	Solenoid 11
5J6-8	BRN/RED	Solenoid 10
5J6-9	BRN/BLK	Solenoid 9
5J8-1	WHT/RED	Transformer: 26V ac / 7J2-6
5J8-2	WHT/RED	Transformer: 26V ac / 7J2-6
5J8-3	WHT/RED	Transformer: 26V ac / 7J2-7
5J8-4	WHT/RED	Transformer: 26V ac / 7J2-7
5J8-5	Key Pin	No Connection
5J8-6	BLK/YEL	Transformer: 48V ac / 7J2-11
5J8-7	BLK/YEL	Transformer: 48V ac / 7J2-11
5J8-8	BLK/YEL	Transformer: 48V ac / 7J2-12
5J8-9	BLK/YEL	Transformer: 48V ac / 7J2-12
5J10-1	BLK	Solnd Gnd / 1J13-1
5J10-2	BLK	Solnd Gnd / 1J13-2
5J10-3	BLK	Solnd Gnd / 1J13-3
5J10-4	BLK	Solnd Gnd / 1J13-4
5J11-1	ORN	+25 Vdc (C solnd) / Sol. 01C thru
5J11-2	—	No Connection
5J11-3	Key Pin	No Connection
5J11-4	BRN	+25 Vdc (A solnd)/Sol. 01A, 05A
5J11-5	—	No Connection
5J11-6	BLK	Solnd Gnd
5J11-7	—	No Connection
5J11-8	—	No Connection
5J11-9	RED	+25 Vdc / Sol. 9,10,11, &
5J11-10	—	No Connection
5J11-11	RED/WHT	+50 Vdc / Sol. 17, 19, 21
5J11-12	—	No Connection

GAME CIRCUIT BOARDS INTERBOARDS SIGNALS

POWER SUPPLY INTERBOARD SIGNALS

Connector	Wire Color	Signal Designation/Description
3J1-1	BLK	Ground / 1J17-1
3J1-2	BLK	Ground / 1J17-2
3J1-3	BLK	Ground / 1J17-3
3J1-4	BLK	No Connection
3J1-5	BLK/YEL	Logic Ground
3J1-6	GRY	CPU Pwr: +5V dc Reg / 1J17-4
3J1-7	GRY	" / 1J17-5
3J1-8	GRY	" / 1J17-6
3J1-9	GRY	No Connection
3J1-10	Key Pin	No Connection
3J1-11	WHT/GRY	CPU Pwr: +12V dc Unreg / 1J17-9
3J1-12	WHT/GRY	CPU Pwr: +12V dc Unreg / 1J17-9
3J1-13	GRY/YEL	CPU Power: +12V dc Unreg
3J1-14	BLK/WHT	CPU Pwr: -12V dc Unreg / 1J17-8
3J1-15	BLK/WHT	CPU Pwr: -12V dc Unreg / 1J17-8

Connector	Wire Color	Signal Designation/Description
3J2-1	ORG	Display Power: -100V dc / 4J2-1
3J2-2	—	No Connection
3J2-3	BRN	Display Power: +100V dc / 4J2-3
3J2-4	Key Pin	No Connection
3J2-5	BLK	Ground (Display ckt) / 4J2-5
3J2-6	GRY	Display Power: +5V dc /4J2-6
3J3-1	GRY	Transformer: 19.4V ac, 1Ø, C. T.
3J3-2	GRY	Transformer: 19.4V ac, 1Ø, C. T.
3J3-3	GRY/WHT	Transformer: 19.4V ac, C. T. com
3J3-4	GRY/WHT	Transformer: 19.4V ac, C. T. com
3J3-5	GRY/GRN	Transformer: 19.4V ac, 1Ø, C. T.
3J3-6	GRY/GRN	Transformer: 19.4V ac, 1Ø, C. T.
3J3-7	Key Pin	No Connection
3J3-8	WHT	Transformer: 88.5V ac
3J3-9	WHT	Transformer: 88.5V ac

AUDIO BOARD INTERBOARD SIGNALS

Connector	Wire Color	Signal Designation/Description
11J1-1	RED	Sound Input (from CPU) / 1J16-1
11J1-2	BLK	Sound Input (from CPU) / 1J16-2
11J1-3	—	No Connection
11J1-4	WHT	Ground / 1J16-4
11J3-1	GRY	Power: +5 Vdc / 3J6-7
11J3-2	BLK	Ground / 3J6-11
11J3-3	BLK-WHT	Power: -12 Vdc Unreg / 3J6-2
11J3-4	Key Pin	No Connection
11J3-5	—	No Connection
11J3-6	WHT-GRY	Power: +12 Vdc Unreg / 3J6-6

Connector	Wire Color	Signal Designation/Description
11J2-1	RED	Signal Level (to Vol Cntrl)
11J2-2	BLK	Signal Level (from Vol Cntrl)
11J2-3	—	No Connection
11J2-4	shield	Ground
11J4	Ribbon Cable from CPU 1J21	
11J5-1	BLK-YEL / Speaker	
11J5-2	BLK-YEL / Speaker	
11J5-3	BLK / Speaker	
11J5-4	BLK / Speaker	

MASTER DISPLAY INTERBOARD SIGNALS

Connector	Wire Color	Signal Designation/Description
4J1-1	BRN/GRY	ST-8: Digit Display Strobe / 1J1-1
4J1-2	BRN/VIO	ST-7: Display Digit Strobe / 1J1-2
4J1-3	BRN/BLU	ST-6: Display Digit Strobe / 1J1-3
4J1-4	BRN/GRN	ST-5: Display Digit Strobe / 1J1-4
4J1-5	BRN/YEL	ST-4 :Display Digit Strobe / 1J1-5
4J1-6	BRN/ORG	ST-3: Display Digit Strobe / 1J1-6
4J1-7	BRN/RED	ST-2: Display Digit Strobe / 1J1-7
4J1-8	Key Pin	No Connection
4J1-9	BRN/BLK	ST-1: Display Digit Strobe / 1J1-9
4J2-1	VIO/GRY	ST-16: Digit Display Strobe / 1J2-1
4J2-2	VIO/BLK	ST-15: Display Digit Strobe / 1J2-2
4J2-3	VIO/BLU	ST-14: Display Digit Strobe / 1J2-3
4J2-4	VIO/GRN	ST-13: Display Digit Strobe / 1J2-4
4J2-5	VIO/YEL	ST-12: Display Digit Strobe / 1J2-5
4J2-6	VIO/ORG	ST-11: Display Digit Strobe / 1J2-6
4J2-7	Key Pin	No Connection
4J2-8	VIO/RED	ST-8: Display Digit Strobe / 1J2-8
4J2-9	VIO/BRN	ST-9: Display Digit Strobe / 1J2-9

Connector	Wire Color	Signal Designation/Description
4J3	Ribbon Cable from CPU 1J22	
4J5-1	BLU/BRN	D1 / Display BCD / 1J3-1
4J5-2	BLU/RED	C1 / Display BCD / 1J3-2
4J5-3	BLU/ORG	B1 / Display BCD / 1J3-3
4J5-4	BLU/YEL	A1 / Display BCD / 1J3-4
4J5-5	BLU/GRN	D2 / Display BCD / 1J3-5
4J5-6	Key Pin	No Connection
4J5-7	BLU/BLK	C2 / Display BCD / 1J3-7
4J5-8	BLU/VIO	B2 / Display BCD / 1J3-8
4J5-9	BLU/GRY	A2 / Display BCD / 1J3-9
4J7-1	ORG	Display Power: -100V dc / 3J5-3
4J7-2	—	No Connection
4J7-3	BRN	Display Power: +100V dc / 3J5-4
4J7-4	Key Pin	No Connection
4J7-5	BLK	Ground / 3J5-1
4J7-6	GRY	Power: +5V dc / 3J5-6

GAME CIRCUIT BOARDS INTERBOARDS SIGNALS

Connector	Wire Color	Signal Designation
1J1-1	BRN/GRY	ST-8: Display Digit S
1J1-2	BRN/VIO	ST-7: Display Digit S
1J1-3	BRN/BLU	ST-6: Display Digit S
1J1-4	BRN/GRN	ST-5: Display Digit S
1J1-5	BRN/YEL	ST-4: Display Digit S
1J1-6	BRN/ORG	ST-3: Display Digit S
1J1-7	BRN/RED	ST-2: Display Digit S
1J1-8	Key Pin	No Connection
1J1-9	BRN/BLK	ST-1: Display Digit S
1J3-1	BLU/BRN	D1 / Display BCD / 4
1J3-2	BLU/RED	C1 / Display BCD / 4
1J3-3	BLU/ORG	B1 / Display BCD / 4
1J3-4	BLU/YEL	A1 / Display BCD / 4
1J3-5	BLU/GRN	D2 / Display BCD / 4
1J3-6	Key Pin	No Connection
1J3-7	BLU/BLK	C2 / Display BCD / 4
1J3-8	BLU/VIO	B2 / Display BCD / 4
1J3-9	BLU/GRY	A2 / Display BCD / 4
1J3-10	—	No Connection
1J3-11	—	No Connection
1J3-12	—	No Connection
1J5-1	—	No Connection
1J5-2	Key Pin	No Connection
1J5-3	BLK	Ground (Lamp Ckt)
1J5-4	BLK	Ground (Lamp Ckt)
1J5-5	—	No Connection
1J5-6	—	No Connection
1J5-7	—	No Connection
1J5-8	BLK	Ground (Lamp Ckt)
1J5-9	BLK	Ground (Lamp Ckt)
1J7-1	YEL/BRN	Lamp Col 1 (Q65/66)
1J7-2	YEL/RED	Lamp Col 2 (Q63/64)
1J7-3	YEL/ORG	Lamp Col 3 (Q61/62)
1J7-4	YEL/BLK	Lamp Col 4 (Q59/60)
1J7-5	Key Pin	No Connection
1J7-6	YEL/GRN	Lamp Col 5 (Q57/58)
1J7-7	YEL/BLU	Lamp Col 6 (Q55/56)
1J7-8	YEL/VIO	Lamp Col 7 (Q53/54)
1J7-9	YEL/GRY	Lamp Col 8 (Q51/52)
1J10-1	WHT/GRY	Switch Row 8
1J10-2	WHT/VIO	Switch Row 7
1J10-3	WHT/BLU	Switch Row 6
1J10-4	Key Pin	No Connection
1J10-5	WHT/GRN	Switch Row 5
1J10-6	WHT/YEL	Switch Row 4
1J10-7	WHT/ORG	Switch Row 3
1J10-8	WHT/RED	Switch Row 2
1J10-9	WHT/BRN	Switch Row 1
1J12-1	BRN/BLK	Solenoid 9 (Q17) / 5
1J12-2	BRN/RED	Solenoid 10 (Q9) / 5
1J12-3	Key Pin	No Connection
1J12-4	BRN/ORG	Solenoid 11 (Q16) /
1J12-5	BRN/YEL	Solenoid 12 (Q8) / 5
1J12-6	BRN/GRN	Solenoid 13 (Q15) /
1J12-7	BRN/BLU	Solenoid 14 (Q7) / M
1J12-8	BRN/VIO	Solenoid 15 (Q14) /
1J12-9	BRN/GRY	Solenoid 16 (Q6) / 5
1J16-1	RED	Volume Control Inp
1J16-2	—	No Connection
1J16-3	Key Pin	No Connection
1J16-4	WHT	Signal Ground - CP
1J18-1	—	No Connection
1J18-2	ORN/BLK	Spl Solnd Sw 3
1J18-3	ORN/RED	Spl Solnd Sw 2
1J18-4	ORN/YEL	Spl Solnd Sw 4
1J18-5	ORN/BRN	Spl Solnd Sw 1
1J18-6	Key Pin	No Connection
1J18-7	WHT	Spl Solnd Sw Grou
1J18-8	ORN/GRN	Spl Solnd Sw 5
1J18-9	ORN/BLU	Spl Solnd Sw 6
1J21	Ribbon Cable to Audio Board 11	
1J22	Ribbon Cable to Master Display	

1B CPU INTERBOARD SIGNALS

Description	Connector	Wire Color	Signal Designation/Description
obe / 4J3-1	1J2-1	VIO/GRY	ST-16: Display Digit Strobe / 4J4-1
obe / 4J3-2	1J2-2	VIO/BLK	ST-15: Display Digit Strobe / 4J4-2
obe / 4J3-3	1J2-3	VIO/BLU	ST-14: Display Digit Strobe / 4J4-3
obe / 4J3-4	1J2-4	VIO/GRN	ST-13: Display Digit Strobe / 4J4-4
obe / 4J3-5	1J2-5	VIO/YEL	ST-12: Display Digit Strobe / 4J4-5
obe / 4J3-6	1J2-6	VIO/ORG	ST-11: Display Digit Strobe / 4J4-6
obe / 4J3-7	1J2-7	Key Pin	No Connection
	1J2-8	VIO/RED	ST-10: Display Digit Strobe / 4J4-8
obe / 4J3-9	1J2-9	VIO/BRN	ST-9: Display Digit Strobe / 4J4-9
4-1	1J4-1	VIO	Lamp +18V dc Power
4-2	1J4-2	VIO	"
4-3	1J4-3	Key Pin	No Connection
4-4	1J4-4	—	No Connection
4-5	1J4-5	—	No Connection
	1J4-6	—	No Connection
4-7	1J4-7	—	No Connection
4-8	1J4-8	VIO	Lamp +18V dc Power
4-9	1J4-9	VIO	"
	1J6-1	RED/BRN	Lamp Row 1 (Q80)
	1J6-2	RED/BLK	Lamp Row 2 (Q81)
	1J6-3	RED/ORG	Lamp Row 3 (Q82)
	1J6-4	Key Pin	No Connection
	1J6-5	RED/YEL	Lamp Row 4 (Q83)
	1J6-6	RED/GRN	Lamp Row 5 (Q84)
	1J6-7	RED/BLU	Lamp Row 6 (Q85)
	1J6-8	RED/VIO	Lamp Row 7 (Q86)
	1J6-9	RED/GRY	Lamp Row 8 (Q87)
	1J8-1	GRN-BRN	Switch Col 1 (Q45)
	1J8-2	GRN-RED	Switch Col 2 (Q49)
	1J8-3	GRN-ORG	Switch Col 3 (Q44)
	1J8-4	GRN-YEL	Switch Col 4 (Q48)
	1J8-5	GRN-BLK	Switch Col 5 (Q43)
	1J8-6	Key Pin	No Connection
	1J8-7	GRN-BLU	Switch Col 6 (Q47)
	1J8-8	GRN-VIO	Switch Col 7 (Q42)
	1J8-9	GRN-GRY	Switch Col 8 (Q46)
	1J9	Not Applicable	
	1J11-1	GRY/BRN	Solenoid 1 (Q33) / 5J1-9
	1J11-2	Key Pin	No Connection
	1J11-3	GRY/RED	Solenoid 2 (Q25) / 5J1-7
	1J11-4	GRY/ORG	Solenoid 3 (Q32) / 5J1-6
	1J11-5	GRY/YEL	Solenoid 4 (Q24) / 5J1-5
	1J11-6	GRY/GRN	Solenoid 5 (Q31) / 5J1-4
	1J11-7	GRY/BLU	Solenoid 6 (Q23) / 5J1-3
	1J11-8	GRY/VIO	Solenoid 7 (Q30) / 5J1-2
	1J11-9	GRY/BLK	Solenoid 8 (Q22) / 5J1-1
	1J13-1	BLK	Solenoid Ground / 5J10-1
9	1J13-2	BLK	" / 5J10-2
8	1J13-3	BLK	" / 5J10-3
	1J13-4	BLK	" / 5J10-4
2-6			
5	1J14-1	BLK/RED	Memory Protect / 7J1-4
s. Whl Mtr Cntrl	1J14-2	WHT	Ground / 7J1-3
s. Whl Mtr Cntrl	1J14-3	GRN	ADVANCE Switch / 7J1-1
2-2	1J14-4	BLU	AUTO/MANUAL Switch / 7J1-2
1			
	1J17-1	BLK	Ground / 3J6-11
11J1-1	1J17-2	BLK	" / 3J6-12
	1J17-3	BLK	" / 3J6-13
	1J17-4	GRY	Power: +5V dc / 3J6-7
11J1-4	1J17-5	GRY	" / 3J6-8
	1J17-6	GRY	" / 3J6-9
	1J17-7	Key Pin	No Connection
	1J17-8	BLK/WHT	Power: -12V dc Unreg / 3J6-2
	1J17-9	WHT/GRY	Power: +12V dc Unreg / 3J6-6
	1J19-1	ORN/VIO	Flipper Ground
	1J19-2	ORN/GRY	Flipper Ground
	1J19-3	BLU/ORN	Spl Solnd 3 (Q73) / 5J3-3
	1J19-4	BLU/RED	Spl Solnd 2 (Q71) / 5J3-6
	1J19-5	Key Pin	No Connection
	1J19-6	BLU/YEL	Spl Solnd 4 (Q69) / 5J3-4
	1J19-7	BLU/BRN	Spl Solnd 1 (Q75) / 5J3-7
ard 4J3	1J19-8	BLU/GRN	Spl Solnd 5 (Q77) / 5J3-2
	1J19-9	BLU/BLK	Spl Solnd 6 (Q79) / 5J3-1

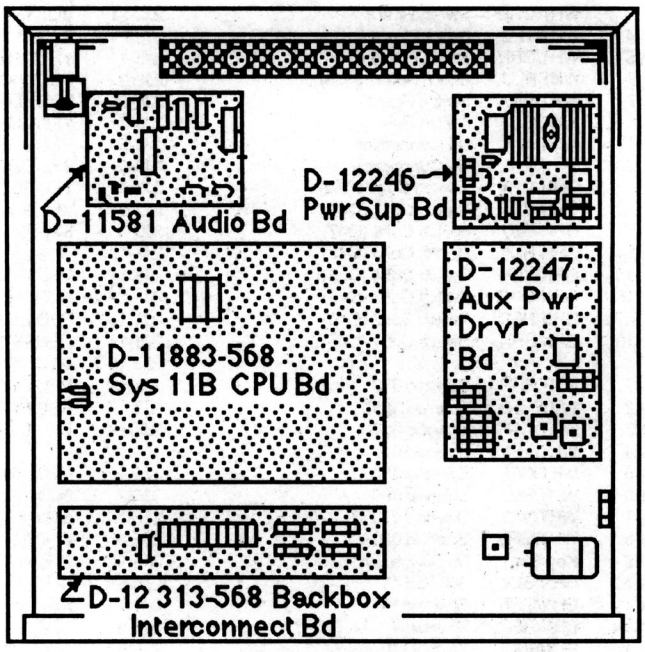

Backbox

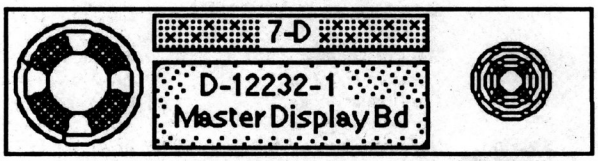

Speaker/Display Panel

WILLIAMS Electronics Games

Diagnostic Test Flowchart

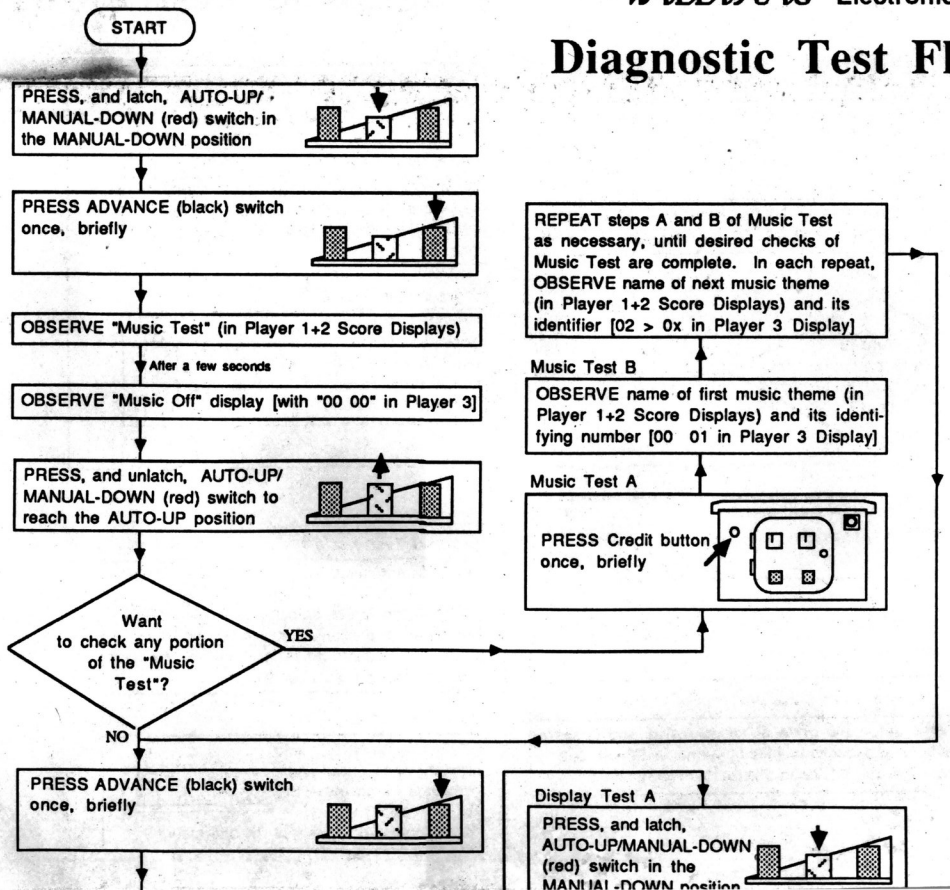
START
PRESS, and latch, AUTO-UP/MANUAL-DOWN (red) switch in the MANUAL-DOWN position
PRESS ADVANCE (black) switch once, briefly
OBSERVE "Music Test" (in Player 1+2 Score Displays)
After a few seconds
OBSERVE "Music Off" display [with "00 00" in Player 3]
PRESS, and unlatch, AUTO-UP/MANUAL-DOWN (red) switch to reach the AUTO-UP position
Want to check any portion of the "Music Test"?
YES
NO
REPEAT steps A and B of Music Test as necessary, until desired checks of Music Test are complete. In each repeat, OBSERVE name of next music theme (in Player 1+2 Score Displays) and its identifier [02 > 0x in Player 3 Display]
Music Test B
OBSERVE name of first music theme (in Player 1+2 Score Displays) and its identifying number [00 01 in Player 3 Display]
Music Test A
PRESS Credit button once, briefly
PRESS ADVANCE (black) switch once, briefly
Display Test A
PRESS, and latch, AUTO-UP/MANUAL-DOWN (red) switch in the

[01 in Player 3 Display]
After a few seconds
OBSERVE automatic display cycle of all digits in each display, individual digits, "walking" digits, etc.
Want to check any portion of the "Display Test"?
YES
NO
PRESS ADVANCE (black) switch once, briefly
OBSERVE "Sound Test" (in Player 1+2 Score Displays) [02 in Player 3 Display]
After a few seconds
OBSERVE automatic cycle of sounds [02 00 - 02 0x " in Player 3 Display]
Want to check any portion of the "Sound Test"?
YES
NO
PRESS ADVANCE (black) switch once, briefly
OBSERVE "All Lamps" (in Player 1+2 Score Displays) [03 in Player 3 Display]
After a few seconds
OBSERVE flashing display of all controlled lamps on playfield and backbox. (NO manual selection of individual lamps is available in this test.)
PRESS ADVANCE (black) switch once, briefly
1
Continued on side 2
Display Test B
PRESS ADVANCE (black) switch once, briefly, to reach the first portion of the "Display Test"
Display Test C
OBSERVE that each display shows the same digit, segment, etc.
REPEAT steps B and C of Display Test, until desired checks of display digits, segments, etc., are complete.
PRESS, and unlatch, AUTO-UP/MANUAL-DOWN (red) switch to reach the AUTO-UP position
Sound Test A
PRESS, and latch, AUTO-UP/MANUAL-DOWN (red) switch in the MANUAL-DOWN position
Sound Test B
OBSERVE that only one sound is identified [02 00 > 02 0x in the Player 3 display]. Listen for that single sound to repeat.
Sound Test C
PRESS ADVANCE (black) switch once, briefly, to reach the next sound of the "Sound Test"
REPEAT steps B and C of Display Test, until desired checks of sounds are complete.
PRESS, and unlatch, AUTO-UP/MANUAL-DOWN (red) switch to reach the AUTO-UP position

DIAGNOSTIC TEST FLOWCHART (SIDE 1)

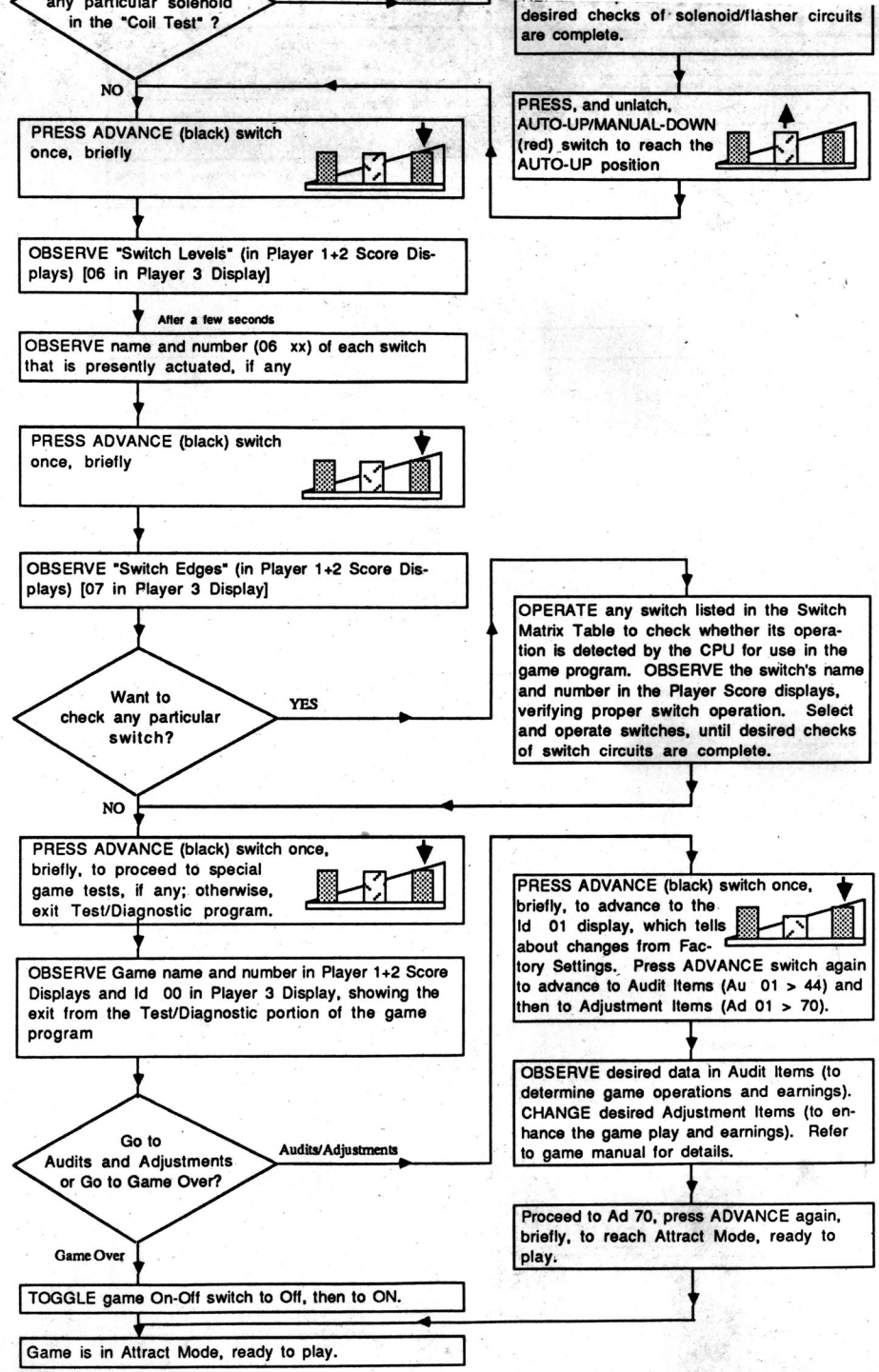
any particular solenoid in the "Coil Test" ?
desired checks of solenoid/flasher circuits are complete.
NO
PRESS ADVANCE (black) switch once, briefly
PRESS, and unlatch, AUTO-UP/MANUAL-DOWN (red) switch to reach the AUTO-UP position
OBSERVE "Switch Levels" (in Player 1+2 Score Displays) [06 in Player 3 Display]
After a few seconds
OBSERVE name and number (06 xx) of each switch that is presently actuated, if any
PRESS ADVANCE (black) switch once, briefly
OBSERVE "Switch Edges" (in Player 1+2 Score Displays) [07 in Player 3 Display]
Want to check any particular switch?
YES
OPERATE any switch listed in the Switch Matrix Table to check whether its operation is detected by the CPU for use in the game program. OBSERVE the switch's name and number in the Player Score displays, verifying proper switch operation. Select and operate switches, until desired checks of switch circuits are complete.
NO
PRESS ADVANCE (black) switch once, briefly, to proceed to special game tests, if any; otherwise, exit Test/Diagnostic program.
PRESS ADVANCE (black) switch once, briefly, to advance to the Id 01 display, which tells about changes from Factory Settings. Press ADVANCE switch again to advance to Audit Items (Au 01 > 44) and then to Adjustment Items (Ad 01 > 70).
OBSERVE Game name and number in Player 1+2 Score Displays and Id 00 in Player 3 Display, showing the exit from the Test/Diagnostic portion of the game program
OBSERVE desired data in Audit Items (to determine game operations and earnings). CHANGE desired Adjustment Items (to enhance the game play and earnings). Refer to game manual for details.
Go to Audits and Adjustments or Go to Game Over?
Audits/Adjustments
Proceed to Ad 70, press ADVANCE again, briefly, to reach Attract Mode, ready to play.
Game Over
TOGGLE game On-Off switch to Off, then to ON.
Game is in Attract Mode, ready to play.

WILLIAMS Electronics Games

Diagnostic Test Flowchart

Side 2

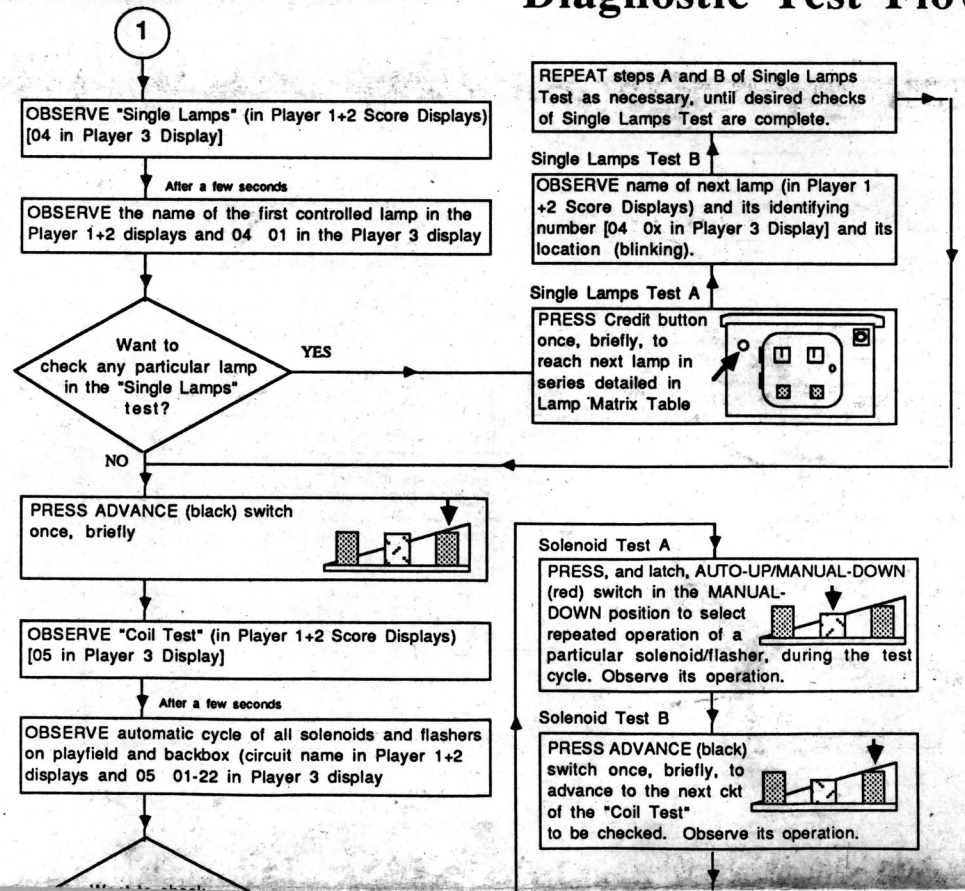
1
OBSERVE "Single Lamps" (in Player 1+2 Score Displays) [04 in Player 3 Display]
After a few seconds
OBSERVE the name of the first controlled lamp in the Player 1+2 displays and 04 01 in the Player 3 display
Want to check any particular lamp in the "Single Lamps" test?
YES
NO
Single Lamps Test A
PRESS Credit button once, briefly, to reach next lamp in series detailed in Lamp Matrix Table
Single Lamps Test B
OBSERVE name of next lamp (in Player 1 +2 Score Displays) and its identifying number [04 0x in Player 3 Display] and its location (blinking).
REPEAT steps A and B of Single Lamps Test as necessary, until desired checks of Single Lamps Test are complete.
PRESS ADVANCE (black) switch once, briefly
OBSERVE "Coil Test" (in Player 1+2 Score Displays) [05 in Player 3 Display]
After a few seconds
OBSERVE automatic cycle of all solenoids and flashers on playfield and backbox (circuit name in Player 1+2 displays and 05 01-22 in Player 3 display
Solenoid Test A
PRESS, and latch, AUTO-UP/MANUAL-DOWN (red) switch in the MANUAL-DOWN position to select repeated operation of a particular solenoid/flasher, during the test cycle. Observe its operation.
Solenoid Test B
PRESS ADVANCE (black) switch once, briefly, to advance to the next ckt of the "Coil Test" to be checked. Observe its operation.

EARTHSHAKER Lamp-Matrix Table

COLUMN / ROW	1 Q66 YEL-BRN 1J7-1	2 Q64 YEL-RED 1J7-2	3 Q62 YEL-ORN 1J7-3	4 Q60 YEL-BLK 1J7-4	5 Q58 YEL-GRN 1J7-6	6 Q56 YEL-BLU 1J7-7	7 Q54 YEL-VIO 1J7-8	8 Q52 YEL-GRY 1J7-9
Q80 1 RED-BRN 1J6-1	Captive Ball 1 (low) 1	BONUS 2X 9	Building 7 17	Building 3 25	Miles 1 33	Top Jet Bumper 41	Left Road Sign 49	Right Road Sign 57
Q81 2 RED-BLK 1J6-2	Captive Ball 2 2	BONUS 3X 10	Building 8 18	Right Standup (2) (High) 26	Miles 2 34	Left Jet Bumper 42	Left Standup (1) 50	Jackpot (SP) 1 58
Q82 3 RED-ORN 1J6-3	Captive Ball 3 3	BONUS 4X 11	Building 9 19	Right Standup (3) (Low) 27	Miles 3 35	Right Jet Bumper 43	Eject Lock 51	Jackpot (SP) 2 59
Q83 4 RED-YEL 1J6-5	Captive Ball 4 4	BONUS 5X 12	Building 4 20	Right Standup 50K 28	Miles 4 36	Right Ramp Jackpot 44	Eject Top (5) 52	Jackpot (SP) 3 60
Q84 5 RED-GRN 1J6-6	Captive Ball 5 (high) 5	BONUS 6X/Lites Ex. Ball 13	Building 5 21	R Inside Return (7) Lane 29	Miles 5 37	Right Ramp Lock 45	Center Standup (4) 53	Jackpot (SP) 4 61
Q85 6 RED-BLU 1J6-7	Captive Ball Arrow (9) 6	BONUS 6X/Lites Special 14	Building 6 22	R Outside Return Lane 30	Miles 10 38	Right Ramp 3 Miles 46	Drop Hole Extra Ball 54	Jackpot (SP) 5 62
Q86 7 RED-VIO 1J6-8	Spinner 7	L Return Lane 15	Building 1 23	Right Outlane 31	Miles 20 39	Center Ramp 100K 47	Drop Hole Lock 55	Jackpot (SP) 6 63
Q87 8 RED-GRY 1J6-9	Jet Bumper Center 8	Left Outlane (8) 16	Building 2 24	SHOOT AGAIN 32	Miles 30 40	Center Ramp 2 Miles 48	Under Fault (6) Loop 56	Jackpot (SP) 7 64

TL = Top Left TR = Top Right BL = Bottom Left BR = Bottom Right (7) = "Zone" SP = Speaker Panel ** = 2 Lamps

EARTHSHAKER Switch-Matrix Table

COLUMN / ROW	1 Q45 GRN-BRN 1J8-1	2 Q49 GRN-RED 1J8-2	3 Q44 GRN-ORN 1J8-3	4 Q48 GRN-YEL 1J8-4	5 Q43 GRN-BLK 1J8-5	6 Q47 GRN-BLU 1J8-7	7 Q42 GRN-VIO 1J8-8	8 Q46 GRN-GRY 1J8-9
1 WHT-BRN 1J10-9	Plumb Bob Tilt 1	Playfield Tilt 9	Left Outlane 17	25	On Ramp 50K 33	Spinner 41	49	Flipper Right 57
2 WHT-RED 1J10-8	C Side Power A/C Relay 2	Outhole 10	Left Return (8) Lane 18	26	On Ramp 25K 34	Fault Open 42	Ball Shooter 50	Flipper Left 58
3 WHT-ORN 1J10-7	Credit Button 3	Ball Trough #1 (R) 11	Left Standup (1) 19	3-Bank DT (left) 27	On Ramp 100K 35	Right Ramp Entry 43	51	59
4 WHT-YEL 1J10-6	Left Coin Chute 4	Ball Trough #2 (Mid) 12	Eject Hole (5) 20	3-Bank DT (mid) 28	On Ramp Bypass 36	Center Ramp Entry 44	Left Jet Bumper 52	60
5 WHT-GRN 1J10-5	Center Coin Chute 5	Ball Trough #3 (L) 13	Right Standup (2) (high) 21	3-Bank DT (right) 29	Ball Popper (top) 37	Center Ramp Middle 45	Right Jet Bumper 53	61
6 WHT-BLU 1J10-3	Right Coin Chute 6	Right Inside (7) Return Lane 14	Right Standup (3) (low) 22	Center Standup (4) 30	Under Playfield Drop Hole 1 38	Center Ramp End 46	Top Jet Bumper 54	62
7 WHT-VIO 1J10-2	Slam Tilt 7	Right Outside Return Lane 15	Captive Ball (9) 23	Right Loop (6) 31	Under Playfield Drop Hole 2 39	47	BL Kicker ("sling") 55	63
8 WHT-GRY 1J10-1	High Score Reset 8	Right Outlane 16	Right Standup (50K) 24	Left Loop (6) 32	Ball Popper (bottom) 40	48	BR Kicker ("sling") 56	64

TL = Top Left TR = Top Right BL = Bottom Left BR = Bottom Right (7) = "Zone"

WARNINGS & NOTICES

W[illegible]ING

[illegible]FETY AND RELIABILITY, *WILLIAMS ELECTRONICS GAMES* does not recommmend or [illegible] any substitute parts or modifications of *WILLIAMS'* equipment. Use of Non-*WILLIAMS'* parts, or m[illegible]cations of game circuitry, may adversely affect game play, or may cause injuries.

SUBS[illegible]TUTE PAR[illegible] OR EQUIPMENT MODIFICATIONS may void FCC Type Acceptance.

BECAUSE THIS GAME IS PROTECTED by Federal copyright, trademark, and patent laws, unauthorized game conversions may be illegal under Federal law.

THIS 'CONVERSION' PRINCIPLE ALSO APPLIES to unauthorized facsimiles of *WILLIAMS'* equipment, logos, designs, publications, assemblies, and games (or game features not deemed to be in the public domain), whether manufactured with *WILLIAMS'* components or not.

WARNING

This equipment generates, uses, and can radiate radio frequency energy, and if not installed and used in accordance with the instructions manual, may cause interference to radio communications. It has been tested and found to comply with the limits for a Class A computing device pursuant to Subpart J of Part 15 of FCC Rules, which are designed to provide reasonable protection against such interference when operated in a commercial environment. Operation of this equipment in a residential area is likely to cause interference in which case the user at his own expense will be required to take whatever measures may be required to correct the interference.

WARNING

FCC STICKER. Check the back of your **EARTHSHAKER** game to verify that an FCC-certification sticker was attached to your game at the factory.

All games that leave *WILLIAMS'* plants have been tested and found to comply with FCC Rules. Because the sticker is proof of this fact, legal repercussions to the owner and distributor of the game may result, if the sticker is missing. If you receive any *WILLIAMS'* game, manufactured after December 1982, that has no FCC sticker, call *WILLIAMS'* for advice or write us a note on your Game Registration Card. Be sure that the card bears your game's serial num[illegible]

RF Interference Notice

CABLE HARNESS PLACEMENTS and ground strap routing on this game have been designed to keep RF radiation and conduction within levels accepted by the FCC Rules.

TO MAINTAIN THESE LEVELS, reposition harnesses and reconnect ground straps to their original placements, if they become disconnected during maintenance.

Notice

EARTHSHAKER and MULTI-BALL are trademarks of *WILLIAMS ELECTRONICS GAMES, INC.*

FOR SERVICE...

CALL your authorized *WILLIAMS'* Distributor.

Williams®
ELECTRONICS GAMES, INC.
3401 N. California Avenue
Chicago, IL 60618

WARNING: **Transport this game ONLY with hinged backbox down!**